User Manual

EN

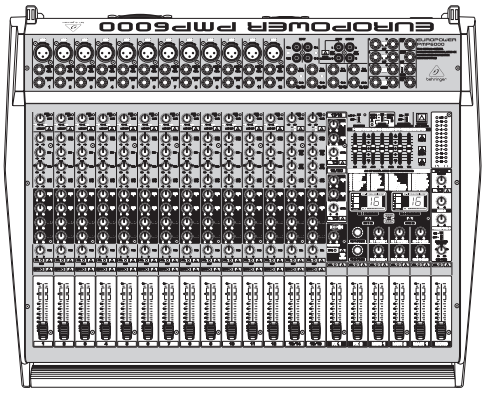

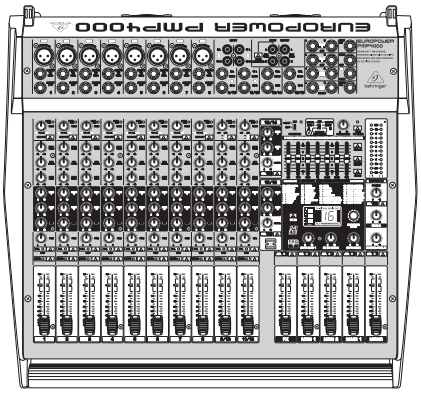

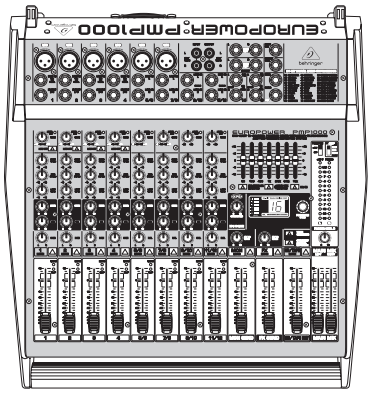

EUROPOWER

PMP6000

1600-Watt 20-Channel Powered Mixer with Dual Multi-FX Processor and FBQ Feedback Detection System

PMP4000

1600-Watt 16-Channel Powered Mixer with Multi-FX Processor and FBQ Feedback Detection System

PMP1000

500-Watt 12-Channel Powered Mixer with Multi-FX Processor and FBQ Feedback Detection System

V 1.0

behringer

EN

Table of Contents

Thank you **2**

Important Safety Instructions **3**

Legal Disclaimer **3**

Limited warranty **3**

1. Introduction **4**

1.1 Before you get started 4

1.2 The manual 4

2. Control Elements **8**

2.1 Mono and stereo channels 8

2.2 Equalizer and FBQ 9

2.3 Effects section 10

2.4 Main and monitor section 10

2.5 Rear panel 11

3. Digital Effects Processor **11**

4. Installation **13**

4.1 Mains connection 13

4.2 Audio connections 13

4.3 Loudspeaker connections 14

5. Wiring Examples **14**

6. Specifications **18**

Thank you

Congratulations! With the PMP1000/PMP4000/PMP6000 you have acquired a state-of-the-art power mixer that sets new standards. Right from the very start it has been our goal to design a revolutionary unit that can be used for a wide variety of applications. Indeed, this overwhelming power mixer gives you plenty of functionality and a broad range of connection and expansion options.

EN Important Safety Instructions

CAUTION
RISK OF ELECTRIC SHOCK!
DO NOT OPEN!
ATTENTION
RISQUE D'ÉLECTROCUTION !
NE PAS OUVRIR !

Terminals marked with this symbol carry electrical current of sufficient magnitude to constitute risk of electric shock. Use only high-quality professional speaker cables with ¼" TS or twist-locking plugs pre-installed. All other installation or modification should be performed only by qualified personnel.

This symbol, wherever it appears, alerts you to the presence of uninsulated dangerous voltage inside the enclosure - voltage that may be sufficient to constitute a risk of shock.

This symbol, wherever it appears, alerts you to important operating and maintenance instructions in the accompanying literature. Please read the manual.

Caution
To reduce the risk of electric shock, do not remove the top cover (or the rear section). No user serviceable parts inside. Refer servicing to qualified personnel.

Caution
To reduce the risk of fire or electric shock, do not expose this appliance to rain and moisture. The apparatus shall not be exposed to dripping or splashing liquids and no objects filled with liquids, such as vases, shall be placed on the apparatus.

Caution
These service instructions are for use by qualified service personnel only. To reduce the risk of electric shock do not perform any servicing other than that contained in the operation instructions. Repairs have to be performed by qualified service personnel.

1. Read these instructions.

2. Keep these instructions.

3. Heed all warnings.

4. Follow all instructions.

5. Do not use this apparatus near water.

6. Clean only with dry cloth.

7. Do not block any ventilation openings. Install in accordance with the manufacturer's instructions.

8. Do not install near any heat sources such as radiators, heat registers, stoves, or other apparatus (including amplifiers) that produce heat.

9. Do not defeat the safety purpose of the polarized or grounding-type plug. A polarized plug has two blades with one wider than the other. A grounding-type plug has two blades and a third grounding prong. The wide blade or the third prong are provided for your safety. If the provided plug does not fit into your outlet, consult an electrician for replacement of the obsolete outlet.

10. Protect the power cord from being walked on or pinched particularly at plugs, convenience receptacles, and the point where they exit from the apparatus.

11. Use only attachments/accessories specified by the manufacturer.

12. Use only with the cart, stand, tripod, bracket, or table specified by the manufacturer, or sold with the apparatus. When a cart is used, use caution when moving the cart/apparatus combination to avoid injury from tip-over.

13. Unplug this apparatus during lightning storms or when unused for long periods of time.

14. Refer all servicing to qualified service personnel. Servicing is required when the apparatus has been damaged in any way, such as power supply cord or plug is damaged, liquid has been spilled or objects have fallen into the apparatus, the apparatus has been exposed to rain or moisture, does not operate normally, or has been dropped.

15. The apparatus shall be connected to a MAINS socket outlet with a protective earthing connection.

16. Where the MAINS plug or an appliance coupler is used as the disconnect device, the disconnect device shall remain readily operable.

17. Correct disposal of this product: This symbol indicates that this product must not be disposed of with household waste, according to the WEEE Directive (2012/19/EU) and your national law. This product should be taken to a collection center licensed for the recycling of waste electrical and electronic equipment (EEE). The mishandling of this type of waste could have a possible negative impact on the environment and human health due to potentially hazardous substances that are generally associated with EEE. At the same time, your cooperation in the correct disposal of this product will contribute to the efficient use of natural resources. For more information about where you can take your waste equipment for recycling, please contact your local city office, or your household waste collection service.

18. Do not install in a confined space, such as a book case or similar unit.

19. Do not place naked flame sources, such as lighted candles, on the apparatus.

20. Please keep the environmental aspects of battery disposal in mind. Batteries must be disposed-of at a battery collection point.

21. This apparatus may be used in tropical and moderate climates up to 45°C.

LEGAL DISCLAIMER

Music Tribe accepts no liability for any loss which may be suffered by any person who relies either wholly or in part upon any description, photograph, or statement contained herein. Technical specifications, appearances and other information are subject to change without notice. All trademarks are the property of their respective owners. Midas, Klark Teknik, Lab Gruppen, Lake, Tannoy, Turbosound, TC Electronic, TC Helicon, Behringer, Bugera, Aston Microphones and Coolaudio are trademarks or registered trademarks of Music Tribe Global Brands Ltd. © Music Tribe Global Brands Ltd. 2021 All rights reserved.

LIMITED WARRANTY

For the applicable warranty terms and conditions and additional information regarding Music Tribe's Limited Warranty, please see complete details online at musictribe.com/warranty.

EN

1. Introduction

Further advantages are the integrated **Voice Canceller** that removes vocal passages from playbacks, the **FBQ** function, which detects feedback frequencies, and the Speaker Processing function for loudspeaker alignment—all with a resolution of **24 bits** and **40 kHz**. Plus, our tried and tested XENYX Mic Preamps give you crystal-clear audio free of noise and distortion when using microphones.

Behringer is a company with its roots in professional recording studio technology. For many years we have been successful in developing products for studio and live use. These include microphones and 19" units of all types (compressors, enhancers, noise gates, tube processors, headphone amplifiers, digital effects, DI boxes, etc.), monitor and P.A. speakers and professional live and recording mixers. Our entire technical know-how has gone into your PMP power mixer.

1.1 Before you get started

1.1.1 Shipment

Your PMP was carefully packed at the factory and the packaging is designed to protect the unit from rough handling. Nevertheless, we recommend that you carefully examine the packaging and its contents for any signs of physical damage which may have occurred during transit.

◊ **If the unit is damaged, please do NOT return it to Behringer, but notify your dealer and the shipping company immediately. Otherwise, claims for damage or replacement may not be granted.**

◊ **We recommend that you use a flight case, so as to give your power mixer optimum protection during use or transport.**

◊ **Always use the original packing carton to prevent damage during storage or transport.**

◊ **Make sure that children cannot play unsupervised with the device or its packaging.**

◊ **Please ensure proper disposal of all packing materials.**

1.1.2 Initial operation

Be sure that there is enough air space around the unit for cooling and, to avoid overheating, please do not place the EUROPOWER near radiators, etc.

◊ **Blown fuses must be replaced by fuses of the same type and rating! Please refer to the "Specifications" for details.**

The mains connection is made using the enclosed power cord and a standard IEC receptacle. It meets all of the international safety certification requirements.

◊ **Please make sure that all units have a proper ground connection. For your own safety, never remove or disable the ground conductor from the unit or on the AC power cord.**

To avoid damage on the device, do not

- earth the loudspeaker outputs
- connect the loudspeaker outputs to each other
- connect the loudspeaker outputs to those of other amplifiers

IMPORTANT NOTES CONCERNING INSTALLATION

The sound quality may diminish within the range of powerful broadcasting stations and high-frequency sources. Increase the distance between the transmitter and the device and use shielded cables for all connections.

1.1.3 Online registration

Please register your new Behringer equipment right after your purchase by visiting http://behringer.com and read the terms and conditions of our warranty carefully.

Should your Behringer product malfunction, it is our intention to have it repaired as quickly as possible. To arrange for warranty service, please contact the Behringer retailer from whom the equipment was purchased. Should your Behringer dealer not be located in your vicinity, you may directly contact one of our subsidiaries. Corresponding contact information is included in the original equipment packaging (Global Contact Information/European Contact Information). Should your country not be listed, please contact the distributor nearest you. A list of distributors can be found in the support area of our website (http://behringer.com).

Registering your purchase and equipment with us helps us process your repair claims more quickly and efficiently.

Thank you for your cooperation!

1.2 The manual

This manual is designed to give you both an overview of all control elements and to provide details about how to use them. To provide you with a clear structure, we have grouped the control elements according to their function. They can easily be found on the enclosed numbered illustrations. If you need more detailed information on specific topics, please visit our web site at behringer.com.

EN

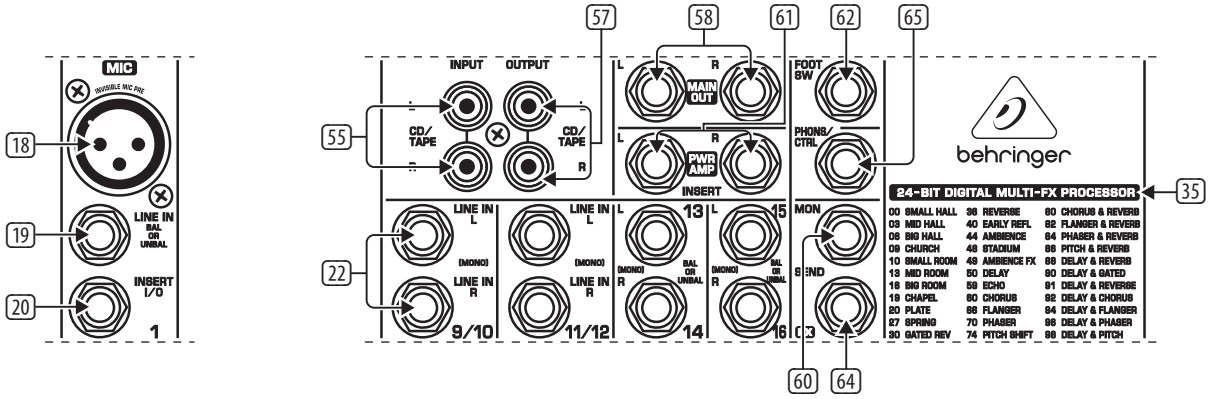

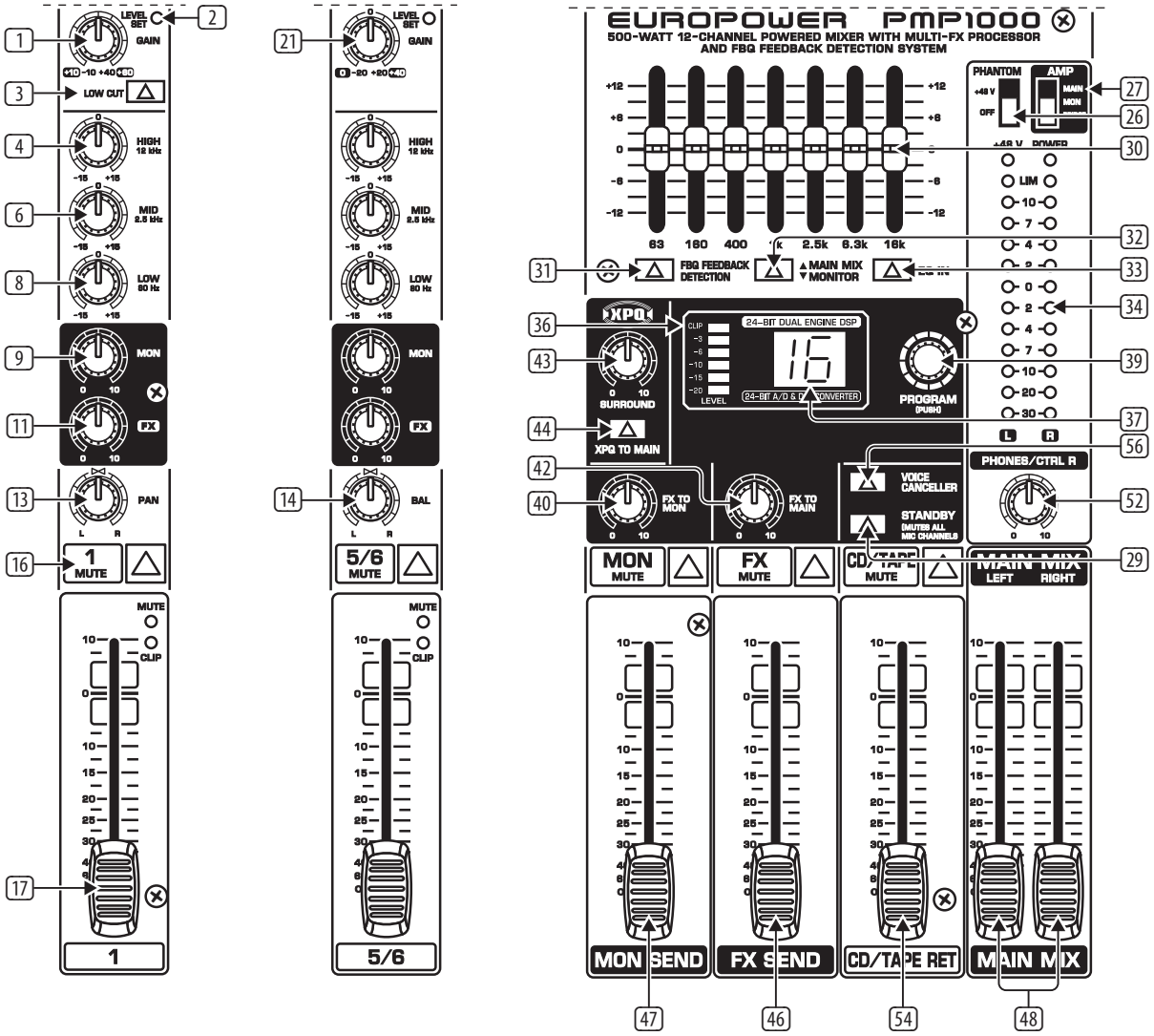

EUROPOWER PMP1000 FRONT PANEL

EN

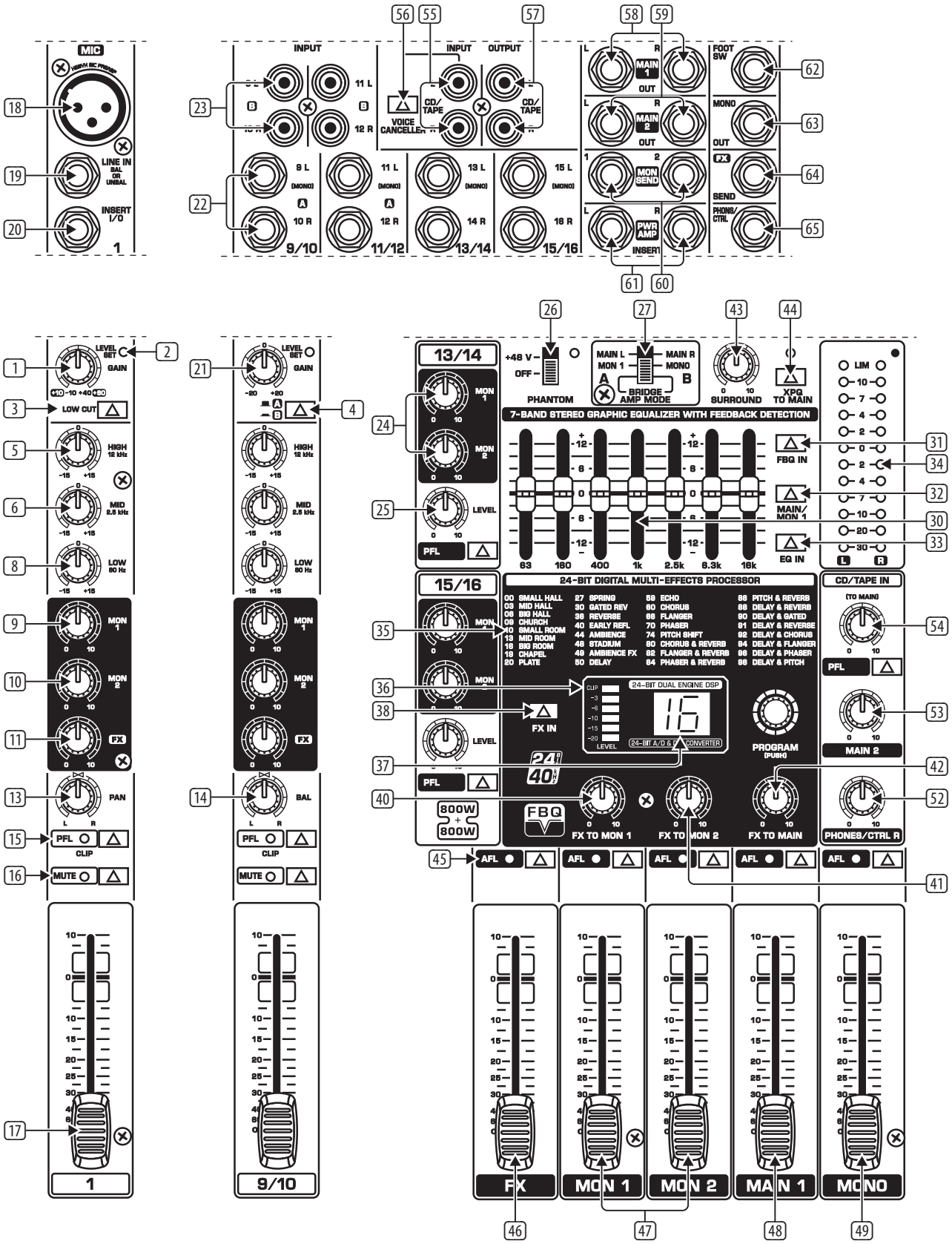

EUROPOWER PMP4000 FRONT PANEL

EN

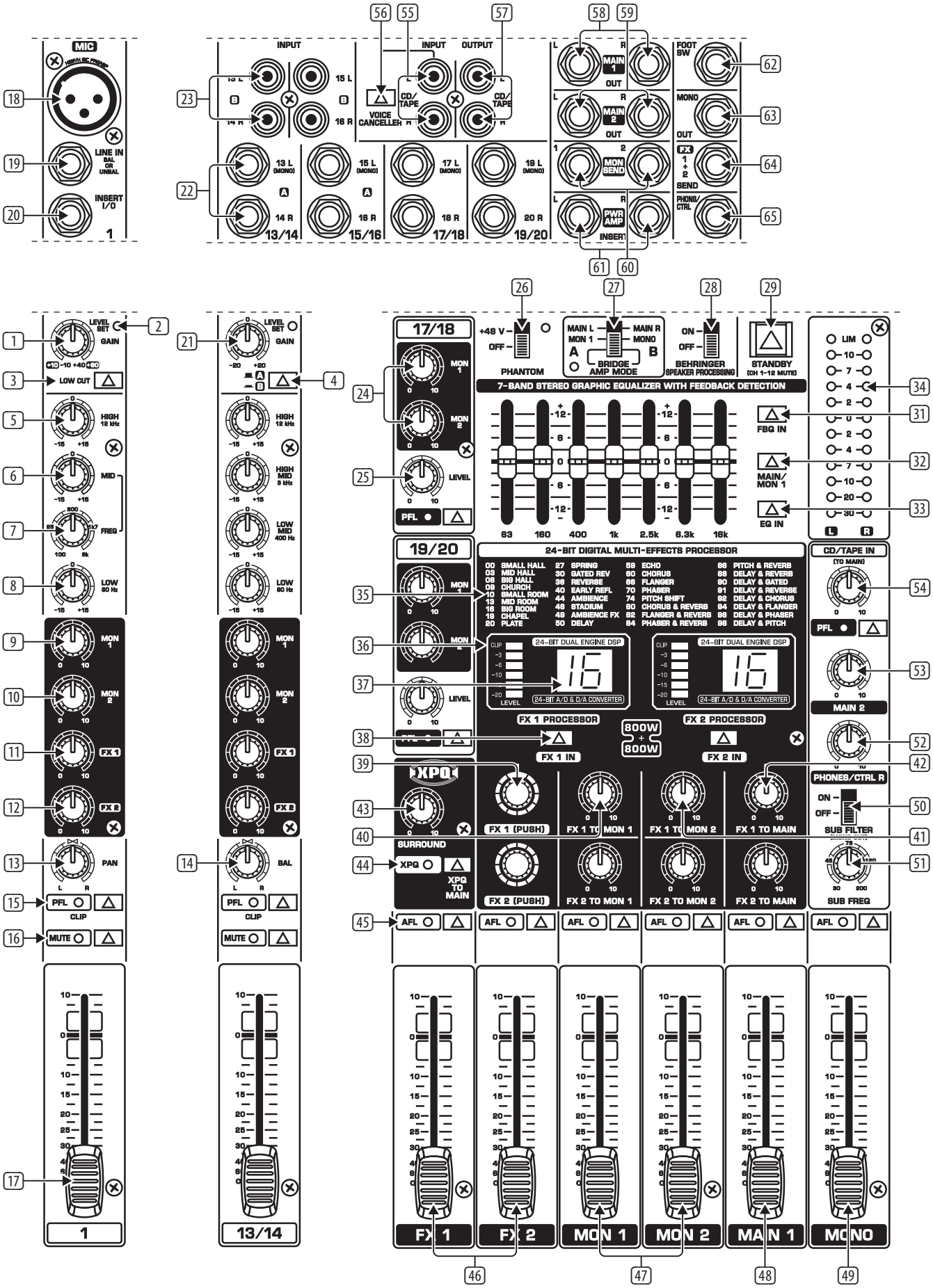

EUROPOWER PMP6000 FRONT PANEL

EN

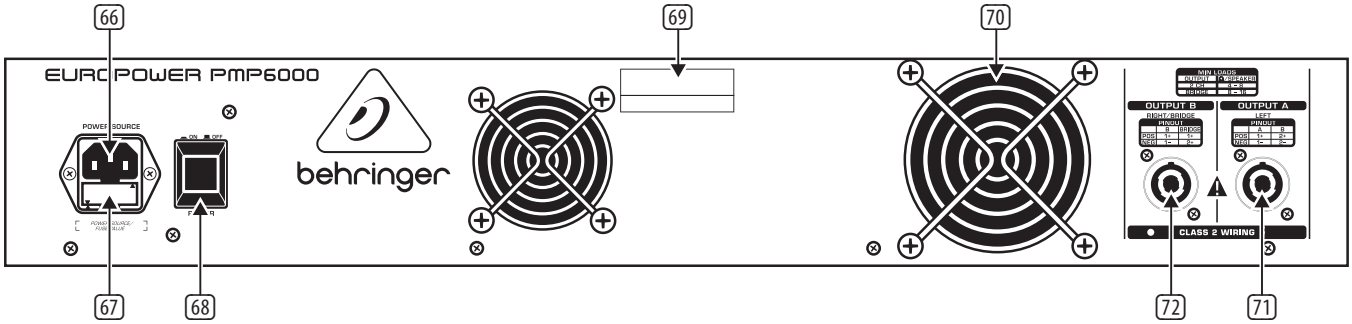

EUROPOWER PMP6000 REAR PANEL

2. Control Elements

A detailed description of all functions of your power mixer can be found in the following chapters. Please also refer to the enclosed sheet with the numbered illustrations to get a good overview of the control layout.

2.1 Mono and stereo channels

(1) Use the **GAIN** control to adjust the input gain. Be sure to set this control fully counter-clockwise before you connect or disconnect a signal source to an input. **GAIN** controls both the microphone and the LINE input. The black scale shows the microphone gain (+10 to +60 dB on channels with XENYX MIC PREAMPS and 0 to +40 dB on conventional microphone inputs; PMP1000 only, channels 5/6 and 7/8).

The "LINE" scale indicates the **sensitivity** of the LINE input, ranging from +10 to -40 dBu.

PMP1000: The mono/stereo combination channels 5/6 and 7/8 have a **sensitivity** of +20 to -20 dBu.

(2) The **LEVEL SET** LED illuminates when an optimum operating level has been adjusted.

(3) The mono channels are equipped with a high-slope **LOW CUT** filter eliminating unwanted low-frequency signals like rumble noise.

(4) PMP4000/PMP6000 (stereo channels): Press the A/B button to switch from ¼" jacks to RCA connectors, and vice versa. Position "A" = ¼" jacks; position "B" = RCA connectors.

(5) The **HIGH** control in the EQ section governs the high frequency range of the respective channel.

(6) Use the **MID** control to boost or cut the midrange frequencies.

(7) PMP6000: The PMP6000 has an additional semi-parametric filter for the midrange frequencies in the mono channels (tunable from 100 Hz to 8 kHz). Adjust the boost/cut with the MID control, and the frequency with the **FREQ** control.

The stereo channels contain a stereo EQ section. The cut-off frequencies of the high and low bands are 12 kHz and 80 Hz respectively, while the center frequencies of the high-mid and low-mid bands are 3 kHz and 400 Hz respectively.

(8) The **LOW** control allows you to boost/cut the low frequency range.

(9) With the **MON**(ITOR) control you can adjust the volume of each channel in the monitor mix.

(10) The PMP4000 and PMP6000 feature a second **MON** control (**MON** 2) for the volume of the second monitor bus.

(11) The **FX** control determines the signal level sent from each channel to the built-in effects processor; this signal is also present at the FX SEND jack (see (64)).

(12) The PMP6000 has two FX controls (**FX 1** and **FX 2**), so that you can use two effects simultaneously. Accordingly, the PMP6000 also has two effect aux buses, which have one output jack in common (see (46) and (64)).

◊ **Please note that the effects processor signal will be inaudible, as long as the FX TO MON/MAIN controls (40), (41), (42) are set fully counter-clockwise.**

(13) The **PAN**(ORAMA) control determines the position of the channel signal in the stereo main mix.

(14) The **BAL**(ANCE) control for the stereo channels corresponds to the PAN control for the mono channels. It determines the relative volume of the left and right input signals before they are routed to the stereo main output.

(15) PMP4000/PMP6000: When you press the **PFL** button (Pre Fader Listening) the left LED (34) shows the pre-fader input gain of the channel. Adjust the optimum input gain (0 dB) with the GAIN control (1). When PFL is on, the corresponding LED illuminates.

If the LEVEL SET LED (2) is illuminated constantly, the signal is within the optimum operating level range. However, if the CLIP LED indicates that the input gain is too high, you should reduce the level slightly with the GAIN control. The CLIP LED should never be illuminated all the time, only with signal peaks.

(16) The **MUTE** switch mutes the channel in the main mix. The pre-fader signals (monitor buses) remain operative. When MUTE is pressed, the corresponding control LED illuminates.

(17) The channel fader controls the channel signal level in the main mix.

2.1.1 Input section

(18) Each mono input channel is equipped with a balanced microphone input (XLR connector) which provides +48 V phantom power for condenser microphones at the touch of a button (see rear panel).

PMP1000: The two stereo channels 5/6 and 7/8 have an additional balanced XLR microphone input with +48 V phantom power.

◊ **Be sure to switch off your audio system before you activate the phantom power supply to protect your monitor speakers from switch-on thumps.**

(19) Each mono input features one LINE IN connector (¼" jack), which can be used with either balanced or unbalanced signals.

◊ **Please remember to use either the microphone or the line input on a specific channel. Never use both at the same time!**

◊ **When you connect a mono line signal to a stereo channel, always use the left input. The mono signal will then be reproduced by both sides equally.**

◊ **PMP1000: This does not apply to the mono/stereo combination channels 5/6 and 7/8.**

(20) **INSERT I/O**. Insert points or simply inserts are used to process a signal with dynamic processors or equalizers. They are pre-fader, pre-EQ and pre-MON/FX SEND. Unlike reverb and other effects, which are usually added to the dry signal, dynamic processors usually process the entire signal. So, aux send buses are not the best solution. Dynamic processors need to be inserted directly into the signal path. Once processed, the signal then returns to the mixing console at the same point where it left. Signal interruption takes place only if a plug is inserted into the corresponding jack (¼" stereo plug: tip = signal output, ring = input). All mono input channels are equipped with inserts.

(21) The stereo channels have a GAIN control for gain adjustment, with the input sensitivity ranging from +20 to -20 dB.

PMP1000: The stereo channels 5/6 and 7/8 feature an additional XLR connector for microphones whose **gain** can be set from 0 to +40 dB.

(22) Each stereo channel has two line-level inputs (¼" jacks) for the left and right channels. If only the jack marked "L" is used, the channel is mono. The signal will then be reproduced on both sides.

◊ **PMP1000: This does not apply to the mono/stereo combination channels 5/6 and 7/8.**

◊ **PMP1000: Channels 13/14 and 15/16 are routed to the main mix without additional tone or volume adjustment. For example, using the channels 13/14 and 15/16 you can connect a submixer and utilize the PMP1000's power amplifier.**

(23) PMP4000: The stereo channels 9/10 and 11/12 are equipped with additional RCA connectors.

PMP6000: The stereo channels 13/14 and 15/16 are equipped with additional RCA connectors.

◊ **PMP4000/PMP6000: Please note that you need to set the A/B selector (4) to A (¼") or B (RCA) when you connect a signal to the input.**

(24) PMP4000/PMP6000: Each of the two stereo channels has two monitor controls (MON 1/2) and a **LEVEL** control (25). Like the other channels, they also feature a PFL switch.

(25) Instead of a fader this channel has a rotary **LEVEL** control.

(26) The phantom power supply provides the voltage necessary for the operation of condenser microphones. Use the **PHANTOM** switch to activate the supply for the XLR connectors of the input channels. The **+48 V** LED will illuminate when phantom power is on. In most cases, dynamic microphones can still be used, as long as they are connected in a balanced configuration. If in doubt, please contact the manufacturer of your microphone!

◊ **With phantom power switched on, you must never connect microphones to the console (or to a stage/wall box). Also, be sure to mute the monitor/P.A. speakers, before you turn on the phantom power supply. After switching on, please allow the system to stabilize for about one minute, before you adjust the input gain.**

◊ **Caution! Never use unbalanced XLR connectors (pins 1 and 3 interconnected) on the MIC input jacks, if you are going to use the phantom power supply.**

(27) The **AMP MODE** switch determines the mode of operation of the PMP amplifier stage:

PMP1000:

MAIN: In the "MAIN" position the mixer works as a stereo amplifier.

MON: In this mode the monitor signal is present at OUTPUT A (71) and the main signal at OUTPUT B (70) (both are mono).

BRIDGE (bridged mono mode): In **BRIDGE AMP MODE** the output power of OUTPUT A is added to that of OUTPUT B, i.e. OUTPUT B delivers twice its normal output power.

PMP4000/PMP6000:

MAIN L/MAIN R. In position MAIN MIX, the mixer works as a stereo amplifier.

MON 1/MONO. In this mode the monitor 1 signal is present at OUTPUT A (71) and the main signal at OUTPUT B (70) (both are mono).

BRIDGE (bridged mono mode): In BRIDGE AMP MODE the output power of OUTPUT A is added to that of OUTPUT B, i.e. OUTPUT B delivers twice its normal output power.

◊ **In BRIDGE mode, always connect only one loudspeaker with an impedance of at least 8 Ω to the OUTPUT B jack! Please note that OUTPUT A must NEVER be used in BRIDGE mode!**

◊ **In all other operating modes, the minimum impedance of the speaker must not fall below 4 Ω.**

◊ **Please note that the power delivered to the speaker connected to OUTPUT B in BRIDGE AMP MODE is considerably higher than the power provided to the speakers wired to the parallel speaker outputs. Please read the information given on the rear panel of the power mixer.**

◊ **Information on how to properly connect your speaker with regard to polarity can be found on the rear of the unit (PIN assignment) (see also (71) and (42)).**

(28) PMP6000: Use the **Behringer SPEAKER PROCESSING** switch to activate a filter that allows you to adapt the mixer to the characteristics of your loudspeakers. If the speakers have a limited frequency response in the bass range, this function allows you to filter this range at the output signal of the mixer and thus adapt it optimally to the frequency response of the speakers.

(29) PMP1000/PMP6000: If **STANDBY** is pressed, all input channels are muted. During pauses you can prevent the microphones from picking up noise or interference, which would then be reproduced by the P.A. system or possibly damage the speaker diaphragms. The benefit is that all faders can be left untouched while you play back music from CD via the CD/TAPE inputs (see (55)). There is also no need to move the faders and lose your mix.

2.2 Equalizer and FBQ

(30) Your power mixer features a graphic 7-band equalizer, which allows you to fine-tune the sound depending on the room acoustics. In the center position the frequency response is not effected. To boost or cut a certain frequency range, simply move the corresponding fader upward or downward respectively.

◊ **Please note that the equalizer behaviour depends on the position of the AMP MODE switch (see (27)).**

EN

31 Press the **FBQ IN** switch to activate the Feedback Detection system (the FBQ will be active only if you have switched on the equalizer 33 before). Frequencies causing feedback are shown by brightly lit fader LEDs. All other LEDs will be darker. Now, cut the frequency range in question until feedback disappears (the LED gets darker or goes out). This function is available for both the main and monitor mix.

PMP1000: The switch **FBQ FEEDBACK DETECTION** performs the same function as on the PMP4000 and PMP6000.

32 Use the **MAIN/MON 1** switch to select whether the equalizer processes the main or the monitor mix. When not pressed, the stereo equalizer processes only the main mix. When the switch is pressed, the EQ processes only the monitor mix.

PMP1000: The **MAIN MIX/MONITOR** switch performs the same function as on the PMP4000 and PMP6000.

33 Press the **EQ IN** switch to activate the equalizer. The fader LEDs illuminate when the EQ is on.

34 Use this LED display to control the output level of the main signal. The upper **LIM LED** illuminates when the internal amp protection circuit responds to levels that are too high.

PMP1000: The POWER LED is illuminated when you switch the unit on.

◊ **The LIM LEDs and the LED display do NOT light up when an external signal is fed in via the PWR AMP INSERT jacks 61.**

FX

2.3 Effects section

35 List of all multi-effects processor presets.

36 The LED level meter on the effects module should always show a sufficiently high level. Make sure that the Clip LED illuminates with signal peaks only. If it is constantly illu-minated, the effects processor is overloading, which can lead to unpleasant distortion. The **FX SEND** fader (PMP1000) or **FX/FX 1/2** fader (PMP4000/PMP6000) controls the level sent to the effects module and to the FX SEND output jacks.

37 The effects display always reads the currently selected preset.

38 PMP4000/PMP6000: Press the **FX 1/2 IN** switch to activate the effects processor.

39 PMP1000/PMP4000: Turn the **PROGRAM** control to select an effects algorithm (preset number starts flashing). Press this control to activate the effect selected (PMP6000: **FX 1/2 (PUSH)**).

◊ **PMP1000: The effects processor is operative all the time. Adjust the effect intensity for the MAIN or MON signals with controls 40 or 42 respectively.**

PMP6000: The PMP6000 has two separate effects processors, which can be used independently of one another. Enable one or both processors with the FX1/2 IN 38 buttons.

40 PMP4000/PMP6000: The **FX 1/2 TO MON 1** control allows you to set the intensity of the multi-effects processors in the monitor mix. No effect is sent to the monitor mix when this control is set fully counter-clockwise.

PMP1000: The **FX TO MON** control performs the same function as on the PMP4000 and PMP6000.

41 The **FX 1/2 TO MON 2** control allows you to determine the effect intensity of the multi-effects processor in the monitor 2 mix. No effect is sent to the monitor 2 mix with this control turned fully counter-clockwise.

42 The **FX 1/2 TO MAIN** control allows you to determine the effect intensity of the multi-effects processor in the main mix. No effect is sent to the main mix with this control turned fully counter-clockwise.

PMP1000: The **FX TO MAIN** control performs the same function as on the PMP4000 and PMP6000.

2.4 Main and monitor section

43 The surround control determines the effect intensity. This is a built-in effect, which widens the stereo panorama, thus making the sound more lively and transparent.

44 Press the **XPQ TO MAIN** switch to activate this effect.

45 Pressing the **AFL** switch (after-fader listening) activates the solo function. If AFL is on for the corresponding channel in the main section, you will only hear the signal from this channel. Its volume can be adjusted with the fader. Switching AFL on has no effect on the main or monitor mix, as long as you don't move the fader. In this way, you can monitor one or several selected signals via the **PHONES/CTRL** jack 65. When AFL is on, the corresponding control LED illuminates.

◊ **The PMP1000 does not have an AFL function.**

46 PMP1000: **FX SEND** fader.

PMP4000: **FX** fader.

PMP6000: **FX 1/2** fader.

This is the master send fader for the signal routed to the effects processor and to the **FX SEND** output 63 (see also 11 and 12).

47 PMP1000: **MON SEND** fader.

PMP4000/PMP6000: **MON 1/2** fader.

These faders are used to set the monitor output volume (see also 9 and 10).

48 PMP1000: The main mix allows you to control the volume from the Main 1 output with both faders.

PMP4000/PMP6000: The **MAIN 1** fader controls the volume of the EUROPOWER. The main signal is also provided at the **MAIN 1** output (see also 58).

49 PMP4000/PMP6000: The **MONO** fader controls the mono mix signal (see also 63).

50 PMP6000: The **SUB FILTER** filters out frequencies above the selected setting, so that only low frequencies are sent to an (active) subwoofer via the MONO OUT 63). Set this switch to "On" to activate the filter.

51 PMP6000: The **SUB FREQ** control determines the cut-off frequency for the subwoofer output. This value can be adjusted from 30 to 200 Hz.

52 The **PHONS/CTRL R** control adjusts the headphone or control room volume (see also 65).

53 PMP4000/PMP6000: The **MAIN 2** control determines the volume at the MAIN 2 output (see also 59), which is the same signal as at MAIN 1, but with extra output jacks and separate volume control.

54 PMP4000/PMP6000: With the **CD/TAPE IN** control you can adjust the volume of the line signal present at the CD/TAPE INPUT 55. Use the PFL switch to monitor the signal.

PMP1000: With the **CD/TAPE RET** fader you can adjust the line signal applied to the CD/TAPE INPUT (55). Use the CD/TAPE MUTE switch to mute the channel.

2.4.1 Connectors

55 Use the **CD/TAPE INPUT** jacks (RCA) to connect an external stereo signal, such as a CD player, tape deck or other line-level sources.

56 The **VOICE CANCELLER** filters vocal-specific frequencies from the CD/TAPE INPUT signal. This function can be used for karaoke, i.e. you can remove the vocals from a song and then sing along with the music yourself.

57 The **CD/TAPE OUTPUT** provides the line level stereo signal (e.g. for a DAT recorder).

◊ **If the CD/TAPE OUT signal is connected to a recording machine whose output signal is returned to the CD/TAPE IN, feedback can occur when you activate the record function on the recording machine. So, disconnect the CD/TAPE IN from the recording machine before you start recording or set the CD/TAPE input signal to zero!**

58 PMP1000: The MAIN OUT jacks allow you to send the main line level signal to an external amplifier, when, for example, you want to use the mixer and effects section. The PMP4000 and PMP6000 have two separately controllable line level MAIN outputs 59 (MAIN 1/2).

60 Connect your monitor power amps or active monitor speakers to the **MON 1/2 SEND** to monitor the signal mix created with the MON controls or to route it to the musicians on stage.

61 The PMP Series comes with a POWER AMP INSERT connection that is provided for various applications. This connection enables you to use the power amplifier of the device to amplify the output signal of another preamp. For example, it is possible to connect a larger mixer or preamp output (line signal) of an instrument amplifier. In this case, you only need an unbalanced, mono jack cable.

Furthermore, it is possible to use the POWER AMP INSERT as a conventional insert to add a compressor or graphic equalizer to the signal path, for instance. Here, a balanced, stereo jack cable is required and the assignment of tip and ring needs to be observed according to Figure 4.5 (see Chapter 4.2 "Audio Connections"). In this case, the ring is the so-called Send, which is connected to the input of the additional device, and the tip is referred to as Return, which is connected to the output of the additional device.

Lastly, it is possible to tap the output signal of the device's mixer section from the POWER AMP INSERT in order to use a second, external power amp. A balanced, stereo jack cable is required with the ring (not the tip) connected to the input of the external power amp. If you want to use the internal and external power amps at the same time, just wire the connector's ring and tip together.

62 The **FOOTSWITCH** jack is for a standard footswitch. You can activate an "effect bypass", thereby muting the effects processor. Use a dual foot switch for the PMP6000, so that you can enable/disable FX1 and FX2 independently of each other. In this case, the tip of the ¼" plug controls FX1, and the ring FX2.

63 PMP4000/PMP6000: The **MONO OUT** is for connecting a subwoofer. The PMP6000 has the additional possibility of setting the low-frequency range for the subwoofer.

Use the SUB FILTER control 50 to adjust the frequency.

64 The **FX SEND** connector can be used to route the FX SEND signal from the input channel, for example, to the input of an external effects device. Since the PMP6000 has two FX controls per input signal (see 12), both FX SEND 1+2 are present at one jack.

◊ **Please note: The SEND signal is in parallel with the FX SEND jacks and with the effects processor, so that both can be controlled together by one control.**

◊ **For the FX signals, use a ¼" stereo plug connected as follows: FX1 = tip; FX2 = ring**

65 The **PHONS/CTRL** connector allows you to connect a pair of stereo headphones or an (active) monitor speaker.

2.5 Rear panel

66 The mains connection is via a standard **IEC** receptacle. An appropriate power cord is supplied with the unit.

67 **FUSE HOLDER**. Before connecting the unit to the mains, ensure that the voltage setting matches your local voltage. Blown fuses should only be replaced by fuses of the same type and rating. Please also read the information given in the "Specifications".

68 Use the **POWER** switch to put your PMP into operation. The POWER switch should always be in the "Off" position before connecting your unit to the mains.

◊ **Please note: The POWER switch does not fully disconnect the unit from the mains. Unplug the power cord completely when the unit is not used for prolonged periods of time.**

69 **SERIAL NUMBER**.

70 This is where you find the cooling fan of the unit.

The PMP6000 has two cooling fans.

71 **OUTPUT A (LEFT)** provides either the left stereo main signal or the monitor signal in mono, depending on the operating mode selected (see 27). NEVER use this output in bridged mono mode.

72 **OUTPUT B (RIGHT/BRIDGE)** provides either the right stereo main signal, the main mix signal (mono) or the bridged mono signal, depending on the operating mode selected.

◊ **In BRIDGE mode always connect only one loudspeaker with an impedance of at least 8 Ω to the OUTPUT B jack! NEVER use OUTPUT A in BRIDGE mode!**

◊ **In all other operating modes the impedance of the connected loudspeaker must not fall below 4 Ω.**

3. Digital Effects Processor

24-BIT MULTI-EFFECTS PROCESSOR

This built-in effects module produces high-grade standard effects such as reverb, chorus, flanger, delay and various combination effects. The integrated effects module has the advantage of requiring no wiring. This way, the danger of creating ground loops or uneven signal levels is eliminated at the outset, completely simplifying the handling. These effect presets are designed to be added to dry signals.

◊ **Turn down the FX controls in those channel strips whose signals you don't wish to process.**

EN

Effect Presets of EUROPOWER PMP6000

No.	EFFECT	Description	No.	EFFECT	Description
	HALL 00-09			DELAY 50-59	
00	SMALL HALL 1	approx. 1.0s reverb decay	50	SHORT DELAY 1	Like a short shattering
01	SMALL HALL 2	approx. 1.2s reverb decay	51	SHORT DELAY 2	1-2 short impulse(s)
02	SMALL HALL 3	approx. 1.5s reverb decay	52	SHORT DELAY 3	1-2 short impulse(s)
03	MID HALL 1	approx. 1.8s reverb decay	53	MID DELAY 1	Classical Delay for up-tempo music (115-125 BPM)
04	MID HALL 2	approx. 2.0s reverb decay	54	MID DELAY 2	Classical Delay for mid-tempo music (105-115 BPM)
05	MID HALL 3	approx. 2.5s reverb decay	55	MID DELAY 3	Classical Delay for slow-tempo music (95-105 BPM)
06	BIG HALL 1	approx. 2.8s reverb decay	56	LONG DELAY 1	Classical Delay for reggae-tempo music (85-95 BPM)
07	BIG HALL 2	approx. 3.2s reverb decay	57	LONG DELAY 2	Classical Delay for dub-tempo music (75-85 BPM)
08	BIG HALL 3	approx. 4s reverb decay	58	LONG DELAY 3	Extra long (nearly infinite) delay effect
09	CHURCH	approx. 7s reverb decay	59	LONG ECHO	Extra long canyon echo effect
	ROOM 10-19			CHORUS 60-69	
10	SMALL ROOM 1	approx. 0.5s reverb decay	60	SOFT CHORUS 1	Unobtrusive effect
11	SMALL ROOM 2	approx. 0.8s reverb decay	61	SOFT CHORUS 2	Unobtrusive effect with different color
12	SMALL ROOM 3	approx. 1.0s reverb decay	62	WARM CHORUS 1	Analog sounding
13	MID ROOM 1	approx. 1.2s reverb decay	63	WARM CHORUS 2	Analog sounding with different color
14	MID ROOM 2	approx. 1.5s reverb decay	64	PHAT CHORUS 1	Pronounced chorus effect
15	MID ROOM 3	approx. 1.8s reverb decay	65	PHAT CHORUS 2	Pronounced chorus effect with different color
16	BIG ROOM 1	approx. 2.0s reverb decay	66	CLASSIC FLANGER	Standard flanger effect
17	BIG ROOM 2	approx. 2.2s reverb decay	67	WARM FLANGER	More analog touch
18	BIG ROOM 3	approx. 2.5s reverb decay	68	DEEP FLANGER	Deep modulation impression
19	CHAPEL	approx. 3s reverb decay	69	HEAVY FLANGER	Extremely pronounced effect
	PLATE 20-29			PHASE/PITCH 70-79	
20	SHORT PLATE	approx. 1.0s reverb decay	70	CLASSIC PHASER	Standard phaser effect
21	MID PLATE	approx. 1.5s reverb decay	71	WARM PHASER	More analog touch
22	LONG PLATE	approx. 2.2s reverb decay	72	DEEP PHASER	Deep modulation impression
23	VOCAL PLATE	approx. 1.2s reverb decay	73	HEAVY PHASER	Extreme strong effect
24	DRUMS PLATE	approx. 1.0s reverb decay	74	PITCH SHIFT DETUNE	2-3-times detune for a wider solo voice sound
25	GOLD PLATE 1	approx. 1.2s reverb decay	75	PITCH SHIFT +3	Minor third added voice
26	GOLD PLATE 2	approx. 2.0s reverb decay	76	PITCH SHIFT +4	Major third added voice
27	SHORT SPRING	approx. 1.0s reverb decay	77	PITCH SHIFT +7	Quint above added voice
28	MID SPRING	approx. 2.0s reverb decay	78	PITCH SHIFT -5	Fourth down added voice
29	LONG SPRING	approx. 2.5s reverb decay	79	PITCH SHIFT -12	1 octave down added voice
	GATED/REVERSE 30-39			MULTI 1 80-89	
30	GATED REV SHORT	approx. 0.8s gate time	80	CHORUS + REVERB 1	Soft chorus + medium-short reverb
31	GATED REV MID	approx. 1.2s gate time	81	CHORUS + REVERB 2	Deep chorus + medium-long reverb
32	GATED REV LONG	approx. 2.0s gate time	82	FLANGER + REVERB 1	Soft flanger + medium-short reverb
33	GATED REV XXL	approx. 3.0s gate time	83	FLANGER + REVERB 2	Deep flanger + medium-long reverb
34	GATED REV DRUMS 1	approx. 0.8s gate time	84	PHASER + REVERB 1	Soft phaser + medium-short reverb
35	GATED REV DRUMS 2	approx. 1.2s gate time	85	PHASER + REVERB 2	Deep phaser + medium-long reverb
36	REVERSE SHORT	approx. 0.8s reverb raise	86	PITCH + REVERB 1	Soft voice detuning + medium-short reverb
37	REVERSE MID	approx. 1.2s reverb raise	87	PITCH + REVERB 2	Fourth above interval + medium-long reverb
38	REVERSE LONG	approx. 2.0s reverb raise	88	DELAY + REVERB 1	Short delay + medium-short reverb
39	REVERSE XXL	approx. 3.0s reverb raise	89	DELAY + REVERB 2	Medium-long delay + medium-long reverb
	EARLY REFLECTIONS 40-49			MULTI 2 90-99	
40	EARLY REFLECTION 1	Short	90	DELAY + GATED REV	Short delay + medium-long gated reverb
41	EARLY REFLECTION 2	Medium-short	91	DELAY + REVERSE	Medium-short delay + medium-long reverse reverb
42	EARLY REFLECTION 3	Medium-long	92	DELAY + CHORUS 1	Short delay + soft chorus
43	EARLY REFLECTION 4	Long	93	DELAY + CHORUS 2	Medium-long delay + deep chorus
44	SHORT AMBIENCE	Short	94	DELAY + FLANGER 1	Short delay + soft flanger
45	MID AMBIENCE	Medium-short	95	DELAY + FLANGER 2	Medium-long delay + deep flanger
46	LIVE AMBIENCE	Medium-short	96	DELAY + PHASER 1	Short delay + soft phaser
47	BIG AMBIENCE	Medium-long	97	DELAY + PHASER 2	Medium-long delay + deep phaser
48	STADIUM	Long	98	DELAY + PITCH 1	Short delay + fourth down interval
49	GHOST AMBIENCE	Extra-long special FX	99	DELAY + PITCH 2	Medium-long delay + minor third above interval

EN

4. Installation

4.1 Mains connection

The mains connection is made using the enclosed power cord and a standard IEC receptacle. It meets all of the international safety certification requirements.

Blown fuses must be replaced by fuses of the same type and rating.

◊ **Please make sure that all units have a proper ground connection. For your own safety, never remove or disable the ground conductor from the unit or of the AC power cord.**

4.2 Audio connections

The inputs and outputs of your Behringer EUROPOWER are unbalanced ¼" mono jacks—except for the mono channel line inputs, which are balanced ¼" stereo jacks. Of course, all inputs and outputs work with both balanced and unbalanced connectors. The tape in and outputs are on RCA connectors.

◊ **Please ensure that only qualified personnel install and operate the PMP. During installation and operation, the user must have sufficient electrical contact to earth. Electrostatic charges might affect the operation of the unit.**

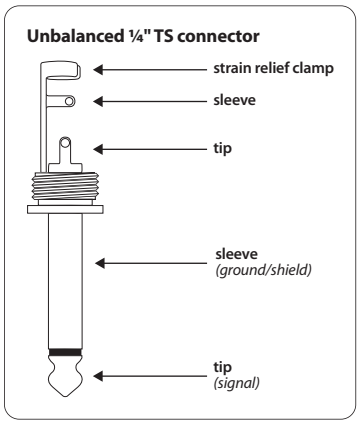

Fig. 4.1: ¼" TS connector

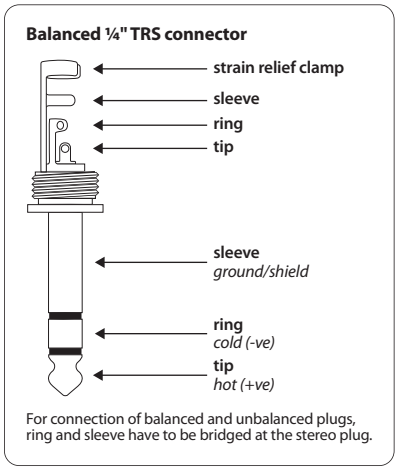

Fig. 4.2: ¼" TRS connector

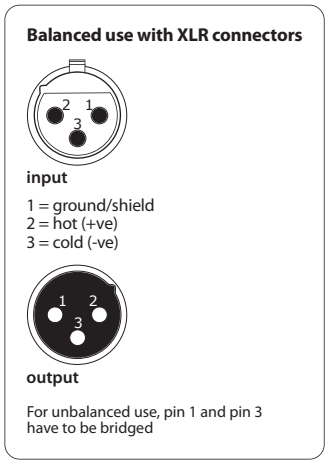

Fig. 4.3: XLR connectors

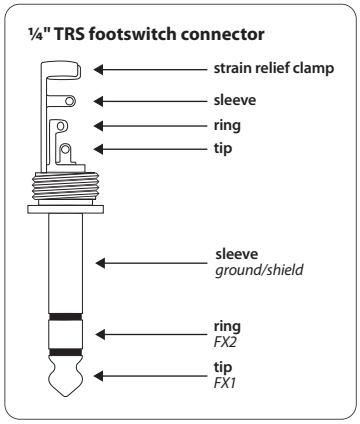

Fig. 4.4: ¼" mono plug for footswitch

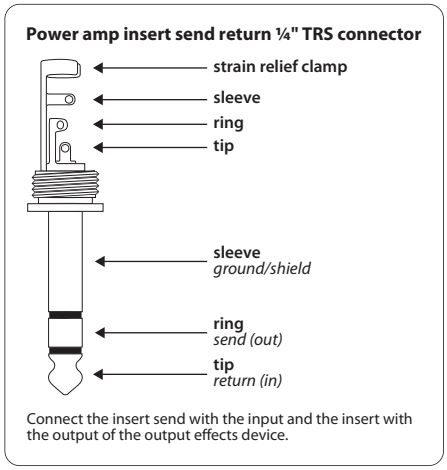

Fig. 4.5: Stereo ¼" TRS connector for power amp ISR connection

EN

4.3 Loudspeaker connections

Your power mixer is equipped with high-quality loudspeaker connectors , which ensure safe and trouble-free operation. The connector was especially developed for high-power loudspeakers. Once it is plugged in, it safely locks into position and cannot be accidentally disengaged. It prevents the occurrence of electrical shock and ensures the correct polarity. Each of the loudspeaker jacks carries only the assigned single signal (see the information given on the rear panel of the power mixer).

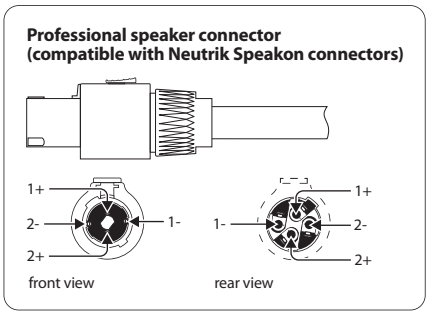

Fig. 4.6: Professional speaker connector with polarity allocation

Please be sure to only use commercial cables (type NL4FC) for connecting your loudspeakers to the power mixer. Please check the pin assignment of your loudspeakers and cables dependent on the PMP speaker output you choose.

EUROPOWER PMP6000/PMP4000/PMP1000				
OUTPUT A	1+	1-	2+	2-
MAIN L	x	x		
MONITOR	x	x		
MONO	x	x		
OUTPUT B			x	x
OUTPUT B	1+	1-	2+	2-
MAIN R	x	x		
MONO	x	x		
MONO	x	x		
BRIDGE	x		x	

Tab. 4.1: Polarity configuration of speaker connectors

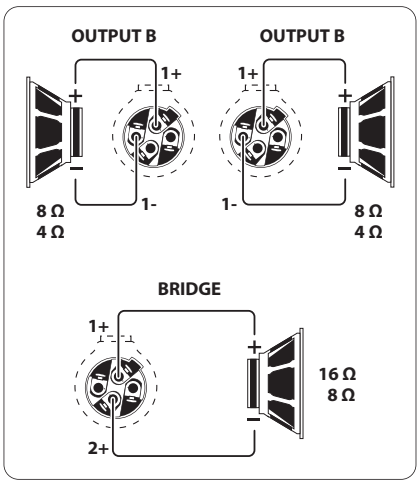

Fig. 4.7: Pin assignment

5. Wiring Examples

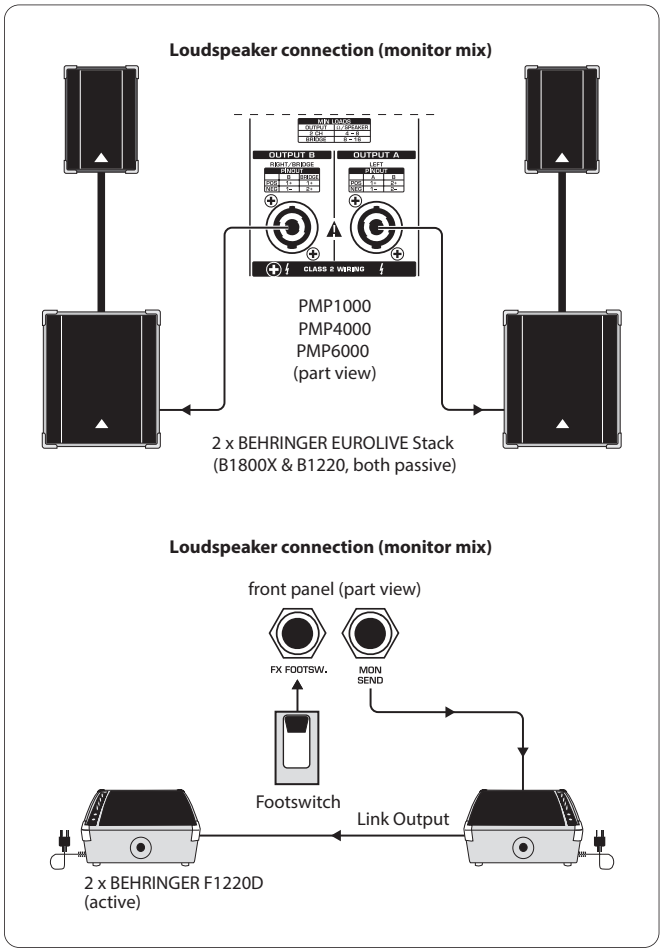

Fig. 5.1: Stereo operation

For stereo operation the POWER AMP switch 27 must be set to its upper position (MAIN or MAIN L/MAIN R). Outputs A and B provide the stereo main signal for passive speakers. The preamp monitor output is connected to two parallel active speakers, which are used as on-stage monitors. Use the footswitch to enable/disable the effects processor.

EN

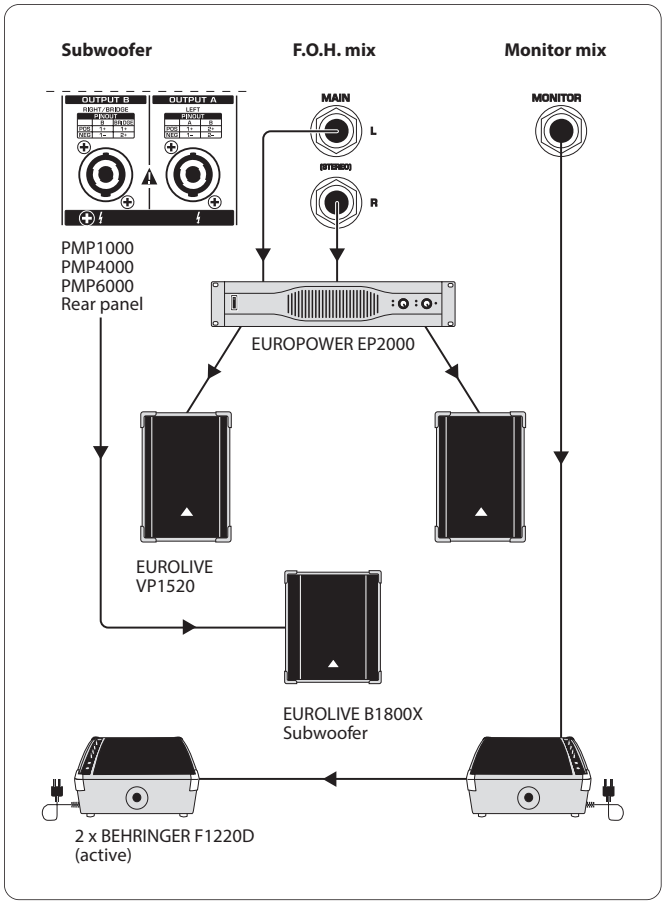

Fig. 5.2: Bridged mono operation

This illustration shows the power mixer with a sub-woofer connected to OUTPUT B. For a bridged mono operation to OUTPUT B, the AMP MODE selector switch 27 must be set to its lower position "BRIDGE". A separate stereo power amp (Behringer EUROPOWER EP2000) connected to the preamp main outputs delivers the stereo main signal. Two active monitor speakers for on-stage operation are connected to the preamp monitor output.

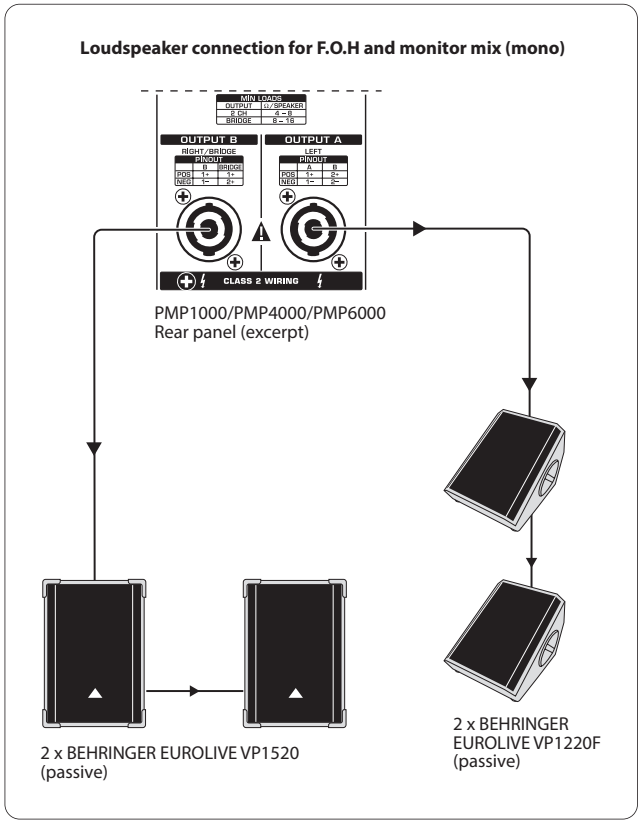

Fig. 5.3: Dual mono operation

For a dual mono operation, the AMP MODE switch 27 must be set to its center position (MON1/MONO for PMP4000/PMP6000 or MON for PMP1000)! The two loudspeaker outputs provide the main and the monitor signals, separately from each another. Each of these signals is then sent to two speakers wired in parallel.

EN

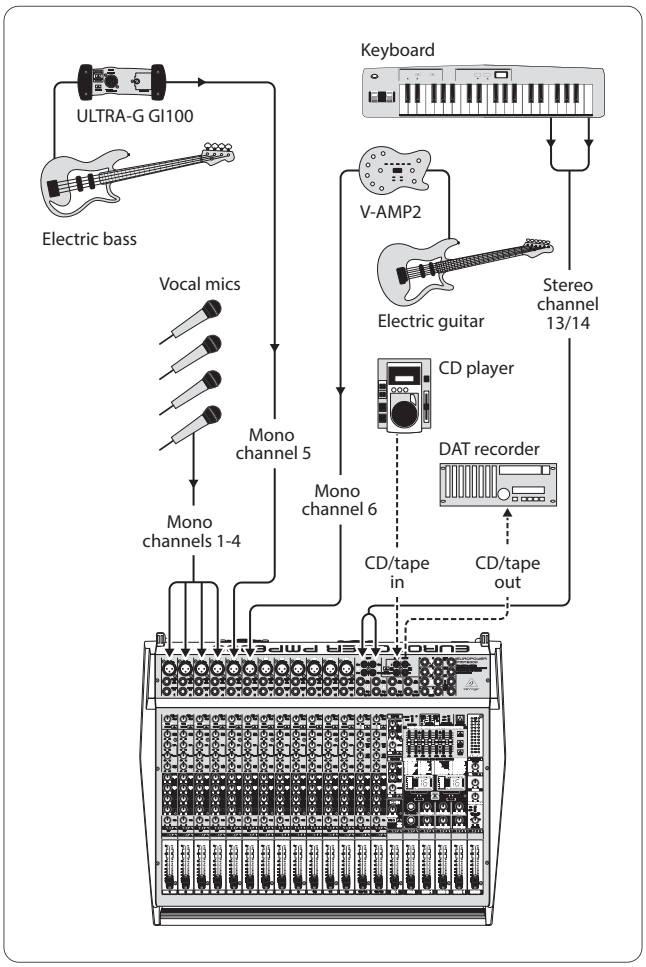

Fig. 5.4: Standard set-up (example)

The illustration shows just one channel configuration possible, comprising mono and stereo sources and additionally the tape input/output for recording the mix signal or feeding in a playback signal.

EN

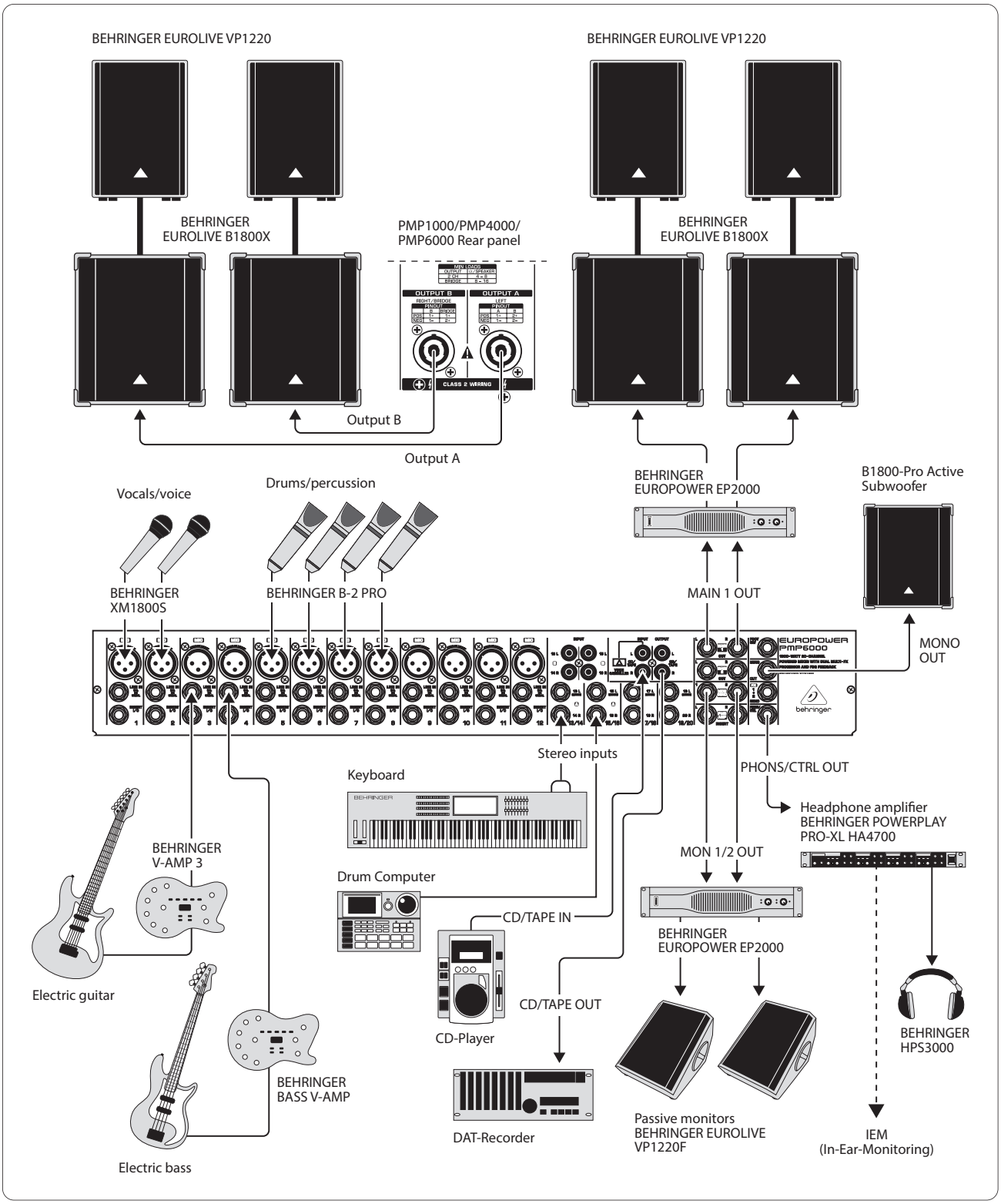

Fig. 5.5: Expanded set-up

This application is an expanded set-up based on the standard set-up as shown in fig. 5.4, and provides additional connection options. Again, this is just an example, which can be expanded in various ways.

EN

6. Specifications

PMP6000

Microphone Inputs

Type	XLR, electronically balanced input circuit
Mic E.I.N. (20 Hz - 20 kHz)	
@ 0 Ohm source resistance	-134 dB / 136 dB A-weighted
@ 50 Ohm source resistance	-131.5 dB / 134 dB A-weighted
@ 150 Ohm source resistance	-129 dB / 155 dB A-weighted
Frequency response	< 10 Hz - 200 kHz (-1 dB) < 10 Hz - > 200 kHz (-3 dB)
Gain	+10 dB, +60 dB
Max. input level	+12 dBu @ +10 dB gain
Impedance	approx. 2.6 kOhm balanced approx. 1.3 kOhm unbalanced
Signal-to-noise ratio	109 dB / 112 dB A-weighted (0 dBu In @ +10 dB gain)
Noise (THD + N)	0.002% / 0.0018% A-weighted

Mono Line Inputs

Type	¼" TS connectors, balanced
Impedance	approx. 20 kOhm
Max. input level	+21 dBu

Stereo Line Inputs

Type	¼" TRS connectors, unbalanced
Impedance	> 3.6 kOhm
Max. input level	+22 dBu

Equalizer

Low	80 Hz / ±15 dB
Mid	100 Hz - 8 kHz / ±15 dB
High	12 kHz / ±15 dB

2 Track Input

Type	RCA
Impedance	approx. 3.6 kOhm

Preamp Outputs

MAIN	
Type	¼" TRS connectors, unbalanced
Impedance	approx. 150 Ohm, unbalanced
Max. output level	+21 dBu

Monitor

Type	¼" TRS connectors, unbalanced
Impedance	approx. 150 Ohm, unbalanced
Max. output level	+21 dBu

Stereo Outputs

Type	¼" TRS connectors, unbalanced
Impedance	approx. 150 Ohm, unbalanced
Max. input level	+21 dBu
Type	RCA
Impedance	approx. 1 kOhm
Max. input level	+21 dBu

Loudspeaker Outputs

Type	Professional locking connector
Load Impedance:	
MAIN L/R	4 - 8 Ohm
MONITOR/MAIN MONO	4 - 8 Ohm
MAIN MONO/MAIN MONO	4 - 8 Ohm
BRIDGE	8 - 16 Ohm

DSP

Converter	24-bit Delta-Sigma, 64/128-times oversampling
Dynamics D/A	90 dB
Sampling rate	46.875 kHz
Delay Time	max. 5 secs
Signal run time	approx. 1.5 ms (Line In > Line Out)

Display

Type	2 x 2-digit, 7-segment LED

EN

PMP4000

Output Power

RMS @ 1% THD, Both Channels Driven:	
8 Ohm per channel	300 W
4 Ohm per channel	600 W
RMS @ 1% THD, Bridged Mode:	
8 Ohm	1200 W
Peak Power, Both Channels Driven:	
8 Ohm per channel	400 W
4 Ohm per channel	800 W
Peak Power, Bridged Mode:	
8 Ohm	1,600 W

Power Supply

Mains Voltage	
USA/Canada	120 V~, 60 Hz
China/Korea	220 V~, 50/60 Hz
Europe/Australia	230 V~, 50 Hz
Japan	100 V~, 50 - 60 Hz
Fuse 100 - 120 V~	T 10 A H 250 V
Fuse 220 - 240 V~	T 6.3 A H 250 V

Power Consumption

Power consumption	1,050 W
Mains connector	IEC standard receptacle

Dimensions/Weight

Dimensions (H x W x D)	4.8 x 19.5 x 23.5" 122 x 496 x 596 mm
Weight	28.9 lbs / 13.1 kg

Microphone Inputs

Type	XLR, electronically balanced input circuit
Mic E.I.N. (20 Hz - 20 kHz)	
@ 0 Ohm source resistance	-134 dB / 136 dB A-weighted
@ 50 Ohm source resistance	-131.5 dB / 134 dB A-weighted
@ 150 Ohm source resistance	-129 dB / 155 dB A-weighted
Frequency response	< 10 Hz - 200 kHz (-1 dB) < 10 Hz - > 200 kHz (-3 dB)
Gain	+10 dB, +60 dB
Max. input level	+12 dBu @ +10 dB gain
Impedance	approx. 2.6 kOhm balanced approx. 1.3 kOhm unbalanced
Signal-to-noise ratio	109 dB / 112 dB A-weighted (0 dBu In @ +10 dB gain)
Noise (THD + N)	0.002% / 0.0018% A-weighted

Mono Line Inputs

Type	¼" TS connectors, balanced
Impedance	approx. 20 kOhm
Max. input level	+21 dBu

Stereo Line Inputs

Type	¼" TRS connectors, unbalanced
Impedance	> 3.6 kOhm
Max. input level	+22 dBu

Equalizer

Low	80 Hz / ±15 dB
Mid	2.5 kHz / ±15 dB
High	12 kHz / ±15 dB

2 Track Input

Type	RCA
Impedance	approx. 3.6 kOhm

EN

Preamp Outputs

MAIN	
Type	¼" TRS connectors, unbalanced
Impedance	approx. 150 Ohm, unbalanced
Max. output level	+21 dBu

Monitor

Type	¼" TRS connectors, unbalanced
Impedance	approx. 150 Ohm, unbalanced
Max. output level	+21 dBu

Stereo Outputs

Type	¼" TRS connectors, unbalanced
Impedance	approx. 150 Ohm, unbalanced
Max. input level	+21 dBu
Type	RCA
Impedance	approx. 1 kOhm
Max. input level	+21 dBu

Loudspeaker Outputs

Type	Professional locking connector
Load Impedance:	
MAIN L/R	4 - 8 Ohm
MONITOR/MAIN MONO	4 - 8 Ohm
MAIN MONO/MAIN MONO	4 - 8 Ohm
BRIDGE	8 - 16 Ohm

DSP

Converter	24-bit Delta-Sigma, 64/128-times oversampling
Dynamics D/A	90 dB
Sampling rate	46.875 kHz
Delay Time	max. 5 secs
Signal run time	approx. 1.5 ms (Line In > Line Out)

Display

Type	2-digit, 7 segment LED

Output Power

RMS @ 1% THD, Both Channels Driven:	
8 Ohm per channel	300 W
4 Ohm per channel	600 W
RMS @ 1% THD, Bridged Mode:	
8 Ohm	1200 W
Peak Power, Both Channels Driven:	
8 Ohm per channel	400 W
4 Ohm per channel	800 W
Peak Power, Bridged Mode:	
8 Ohm	1,600 W

Power Supply

Mains Voltage	
USA/Canada	120 V~, 60 Hz
China/Korea	220 V~, 50/60 Hz
Europe/Australia	230 V~, 50 Hz
Japan	100 V~, 50 - 60 Hz
Fuse 100 - 120 V~	T 10 A H 250 V
Fuse 220 - 240 V~	T 6.3 A H 250 V

Power Consumption

Power consumption	1,050 W
Mains connector	IEC standard receptacle

Dimensions/Weight

Dimensions (H x W x D)	4.8 x 18.1 x 18.7" 122 x 460 x 476 mm
Weight	22.9 lbs / 10.4 kg

EN

PMP1000

Microphone Inputs

Type	XLR, electronically balanced input circuit
Mic E.I.N. (20 Hz - 20 kHz)	
@ 0 Ohm source resistance	-134 dB / 136 dB A-weighted
@ 50 Ohm source resistance	-131.5 dB / 134 dB A-weighted
@ 150 Ohm source resistance	-129 dB / 155 dB A-weighted
Frequency response	< 10 Hz - 200 kHz (-1 dB) < 10 Hz - > 200 kHz (-3 dB)
Gain	+10 dB, +60 dB
Max. input level	+12 dBu @ +10 dB gain
Impedance	approx. 2.6 kOhm balanced approx. 1.3 kOhm unbalanced
Signal-to-noise ratio	109 dB / 112 dB A-weighted (0 dBu In @ +10 dB gain)
Noise (THD + N)	0.002% / 0.0018% A-weighted

Mono Line Inputs

Type	¼" TS connectors, balanced
Impedance	approx. 20 kOhm
Max. input level	+21 dBu

Equalizer

Low	80 Hz / ±15 dB
Mid	2.5 kHz / ±15 dB
High	12 kHz / ±15 dB

2 Track Input

Type	RCA
Impedance	approx. 3.6 kOhm

Preamp Outputs

MAIN	
Type	¼" TRS connectors, unbalanced
Impedance	approx. 150 Ohm, unbalanced
Max. output level	+21 dBu

Monitor

Type	¼" TRS connectors, unbalanced
Impedance	approx. 150 Ohm, unbalanced
Max. output level	+21 dBu

Stereo Outputs

Type	RCA
Impedance	approx. 1 kOhm
Max. input level	+21 dBu

Loudspeaker Outputs

Type	Professional locking connector
Load impedance:	
MAIN L/R	4 - 8 Ohm
MONITOR/MAIN MONO	4 - 8 Ohm
MAIN MONO/MAIN MONO	4 - 8 Ohm
BRIDGE	8 - 16 Ohm

DSP

Converter	24-bit Delta-Sigma, 64/128-times oversampling
Dynamics D/A	90 dB
Sampling rate	46.875 kHz
Delay Time	max. 5 secs
Signal run time	approx. 1.5 ms (Line In > Line Out)

Display

Type	2-digit, 7 segment LED

Output Power

RMS @ 1% THD, Both Channels Driven:	
8 Ohm per channel	90 W
4 Ohm per channel	130 W
RMS @ 1% THD, Bridged Mode:	
8 Ohm	200 W
Peak Power, Both Channels Driven:	
8 Ohm per channel	135 W
4 Ohm per channel	250 W
Peak Power, Bridged Mode:	
8 Ohm	500 W

EN

Power Supply

Mains Voltage	
USA/Canada	120 V~, 60 Hz
China/Korea	220 V~, 50/60 Hz
Europe/Australia	230 V~, 50 Hz
Japan	100 V~, 50 - 60 Hz
Fuse 100 - 120 V~	T 5 A H 250 V
Fuse 220 - 240 V~	T 5 A H 250 V

Power Consumption

Power consumption	500 W
Mains connector	IEC standard receptacle

Dimensions/Weight

Dimensions (H x W x D)	4.8 x 15.6 x 16.7" 122 x 390 x 425 mm
Weight	18.3 lbs / 8.3 kg

EN

FEDERAL COMMUNICATIONS COMMISSION COMPLIANCE INFORMATION

Behringer
EUROPOWER
PMP6000/PMP4000/PMP1000

Responsible Party Name:	**Music Tribe Commercial NV Inc.**
Address:	**5270 Procyon Street, Las Vegas NV 89118, United States**
Phone Number:	**+1 702 800 8290**

EUROPOWER
PMP6000/PMP4000/PMP1000

This equipment has been tested and found to comply with the limits for a Class B digital device, pursuant to part 15 of the FCC Rules. These limits are designed to provide reasonable protection against harmful interference in a residential installation. This equipment generates, uses and can radiate radio frequency energy and, if not installed and used in accordance with the instructions, may cause harmful interference to radio communications. However, there is no guarantee that interference will not occur in a particular installation. If this equipment does cause harmful interference to radio or television reception, which can be determined by turning the equipment off and on, the user is encouraged to try to correct the interference by one or more of the following measures:

- Reorient or relocate the receiving antenna.
- Increase the separation between the equipment and receiver.
- Connect the equipment into an outlet on a circuit different from that to which the receiver is connected.
- Consult the dealer or an experienced radio/TV technician for help.

This device complies with Part 15 of the FCC rules. Operation is subject to the following two conditions:

(1) this device may not cause harmful interference, and
(2) this device must accept any interference received, including interference that may cause undesired operation.

Important information:

Changes or modifications to the equipment not expressly approved by Music Tribe can void the user's authority to use the equipment.

CE

Hereby, Music Tribe declares that this product is in compliance with Directive 2014/35/EU,Directive 2014/30/EU, Directive 2011/65/EU and Amendment 2015/863/EU, Directive 2012/19/EU, Regulation 519/2012 REACH SVHC and Directive 1907/2006/EC.

Full text of EU DoC is available at https://community.musictribe.com/

EU Representative: Music Tribe Brands DK A/S
Address: Ib Spang Olsens Gade 17, DK - 8200 Aarhus N, Denmark

UK Representative: Music Tribe Brands UK Ltd St George's House 215-219 Chester Road, Manchester, Greater Manchester, England, M15 4JE

We Hear You

behringer