Ultra-Low Noise Dual Operational Amplifier

V4580

Dual Operational Amplifier

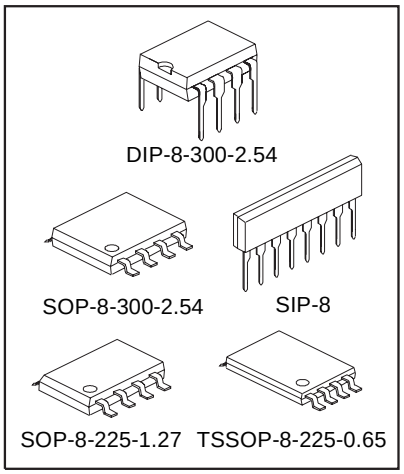

1. Description

V4580 is a state-of-the-art dual operational amplifier, specially designed for low-noise and low-distortion audio and measurement applications. The bi-polar design also offers wide gain-bandwidth and high current, short-circuit proof outputs to drive for example headphones, etc. Its excellent specifications make the V4580 a universal component for many applications.

2. Features

- **Operating voltage** **(±2 ~ ±18 V)**
- **Ultra-low input noise voltage** **(0.8 μVrms typ.)**
- **Wide gain-bandwidth** **(15 Mhz typ.)**
- **Ultra-low distortion** **(0.0005 % typ.)**
- **Package outlines** **SOP-8/225 (V4580E), SOP-8/300 (V4580M), DIP-8 (V4580D), SIP-8 (V4580L)**
- **ROHS compliant (PB-free)**

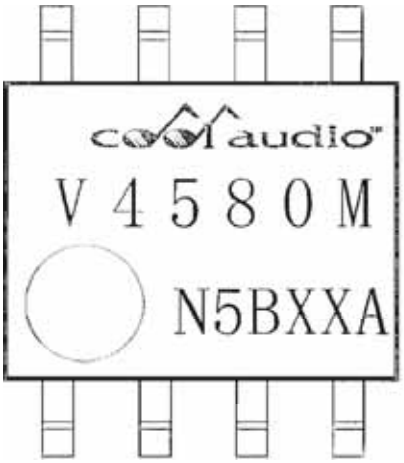

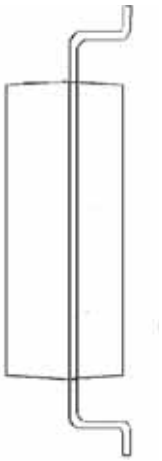

Information furnished by COOLAUDIO is believed to be accurate and reliable. However, no responsibility is assumed by COOLAUDIO for its use, nor for any infringements of patents or other rights of third parties which may result from its use. No license is granted by implication or otherwise under any patent or patent rights of COOLAUDIO.
Rev. 1.0

3. Applications

- **Professional audio applications**
- **Headphone amplifiers**
- **Measurement amplifiers**
- **General purpose application**

4. Pin Configuration

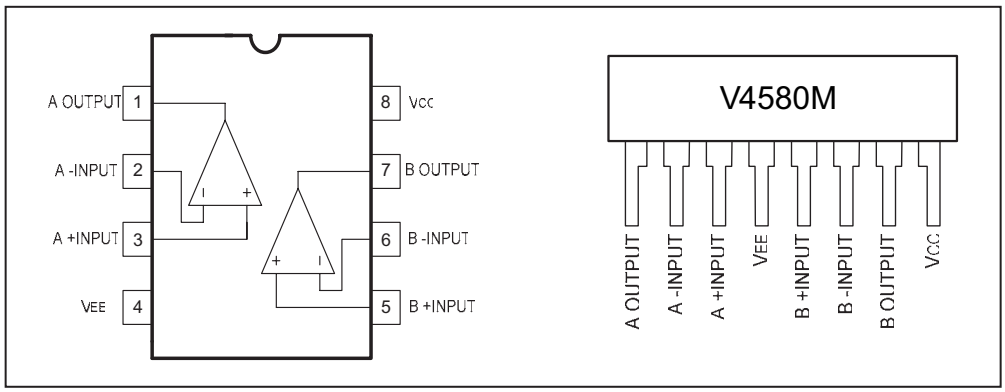

6. Block Diagram

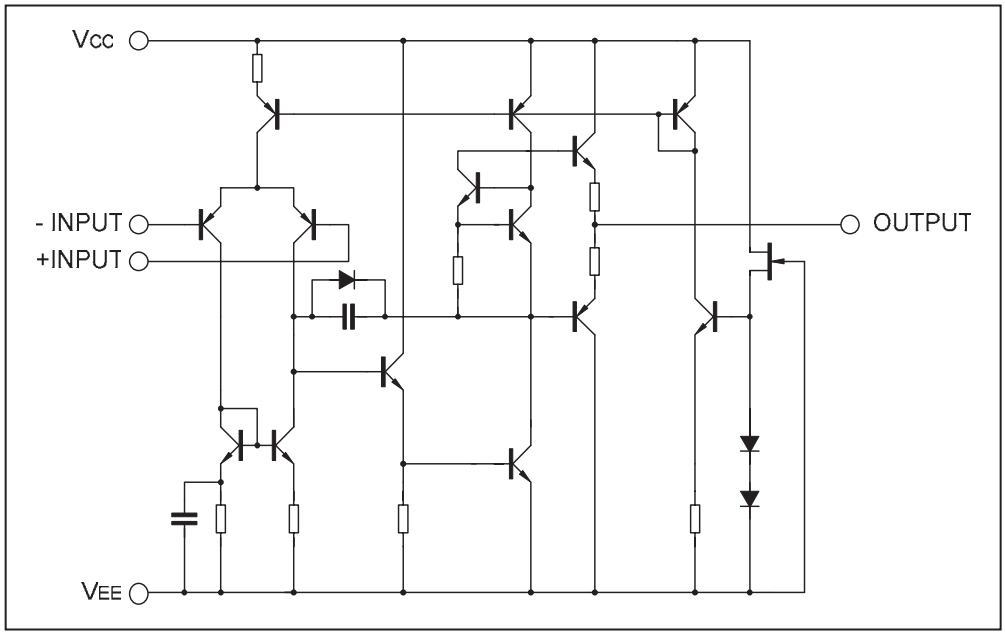

7. Absolute Maximum Ratings (Tamb=25°C)

Characteristic	Symbol	Value	Unit
Differential Input Voltage	V+/V-	±18	V
Supply Voltage	V_{IC}	±15(note)	V
Input Voltage	V_{ID}	±30(note)	V
Output Current	I_O	±50	mA
Power Dissipation	P_D	(V4580D) 800 (V4580L) 800 (V4580M) 350	mW
Operating Temperature Range	Topr	-20~+75	°C
Storage Temperature Range	Tstg	-20~+125	°C

8. Electrical Characteristics (Tamb=25°C, V+/V- =±15)

Characteristic	Symbol	Test Condition	Min	Typ.	Max	Unit
Input Offset Voltage	V_{IO}	Rs≤10kΩ	-	0.5	3	mV
Input Offset Current	V_{IO}		-	5	200	nA
Input Bias Current	I_{IS}		-	100	500	nA
Large Signal Voltage Gain	AV	RL≥2KΩ, V_O=±10V	90	110	-	dB
Output Voltage Swing	V_{OM}	RL≥2KΩ	±12	±13.5	-	V
Input Common Mode Voltage Range	V_{ICM}		±12	±13.5	-	V
Common Mode Rejection Ratio	CMR	Rs≤10kΩ	80	110	-	dB
Supply Voltage Rejection Ratio	SVR	Rs≤10kΩ	90	110	-	dB
Operating Current	I_{CC}		-	5	7	mA
Slew Rate	SR	RL≥2KΩ	-	5	-	V/μs
Gain Bandwidth Product	GB	f=10kHz	-	15	-	MHz
Total Harmonic Distortion	THD	A_V=20dB, V_O=5V, RL=2kΩ, f=1kHz	-	0.0005	-	%
Input Noise Voltage	V_{NI}	RIAA Rs=2.2kΩ, 30kHzLPF	-	0.8	-	μVrms

9. Typical Characteristics Curves

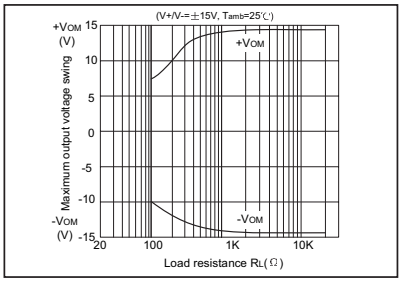

Maximum output voltage swing vs Load resistance

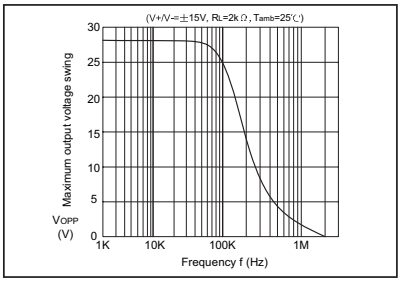

Maximum output voltage swing vs Frequency

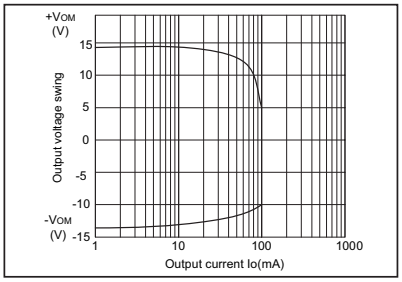

Output voltage swing vs. Output current

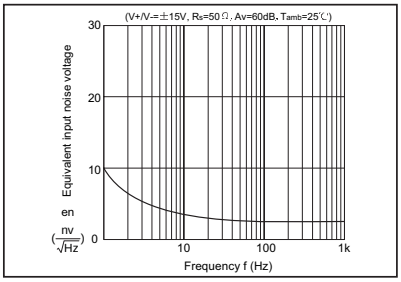

Equivalent input noise voltage vs. Frequency

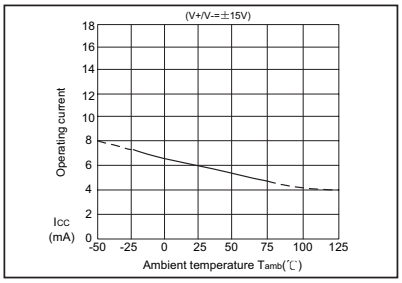

Operating current vs. Temperature

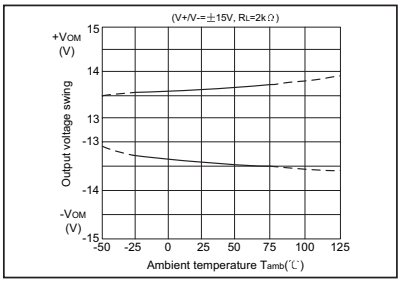

Output voltage swing vs. Temperature

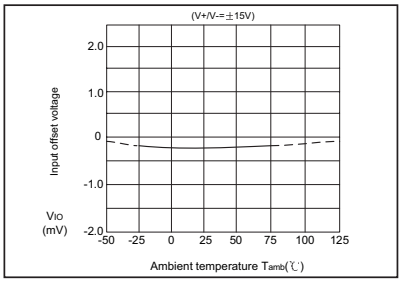

Input offset voltage vs. Temperature

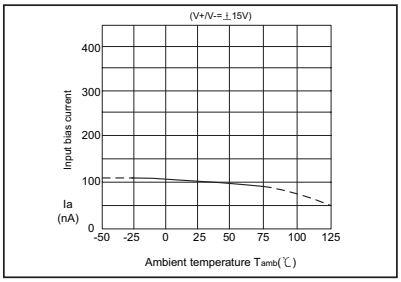

Input bias current vs. Temperature

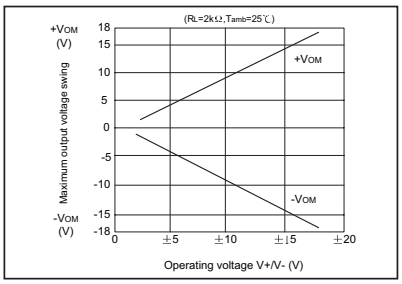

Maximum output voltage swing vs. Operating voltage

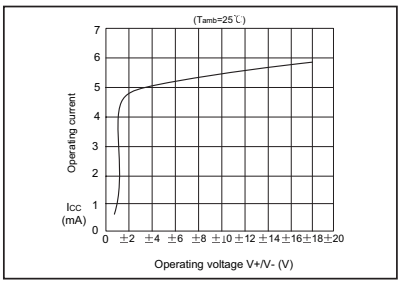

Operating current vs. Operating voltage

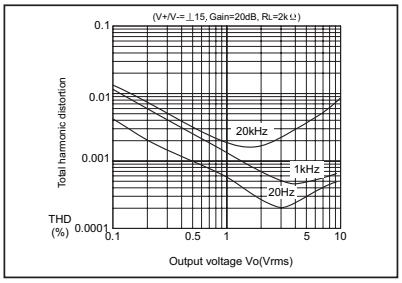

Total harmonic distortion vs. Output voltage

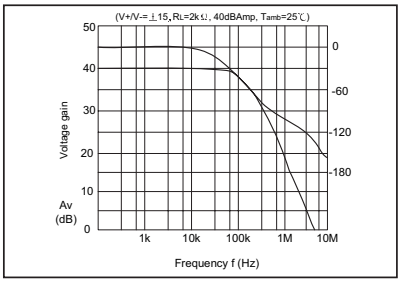

Voltage Gain, Phase vs. Frequency

Green-Mark

“Pb-FREE” label attached on the side of Plastic Pocket and attached above the bar code outside of BOX2.

V4580 **Bill of Material**	Date	
	Made by	
	Auditor	
	Approved by	

Name of the part	**Material weight (mg/unit)**	**Material name**	**Material analysis (element)**	**Material analysis (weight%)**
Leadframe	120mg	KFC	Fe Zn P Cu	2.4% 0.12% 0.03% 95.8%
Plastic	150mg	Epoxy resin	Epoxy resin SiO_2 酚醛 脱膜剂 其它微量元素	10~15% 70~80% 7~10% 0.5%~2% 1~5%
Chip	1.25	Doped Silicon	Si Al	99.4% 0.6%
Die attach material	0.15mg	Glue	Ag Epoxy resin	60~100% 10~30%
Wires	0.42mg	Gold	Au	99.99%
Leads finishing	2.2mg	Lead-Free	Pb<100PPM	

V4580 Infrared Reflow Soldering Condition (suggestion)	Date	
	Made by	
	Auditor	
	Approved by	

MAX. Temperature (Surface)	: Below 235°C
MAX. Temperature Duration	: ≤10s
Above 210°C Duration	: ≤30s
Between 100°C and 160°C Duration	: 60~120s
Soldering Times	: 3 Times

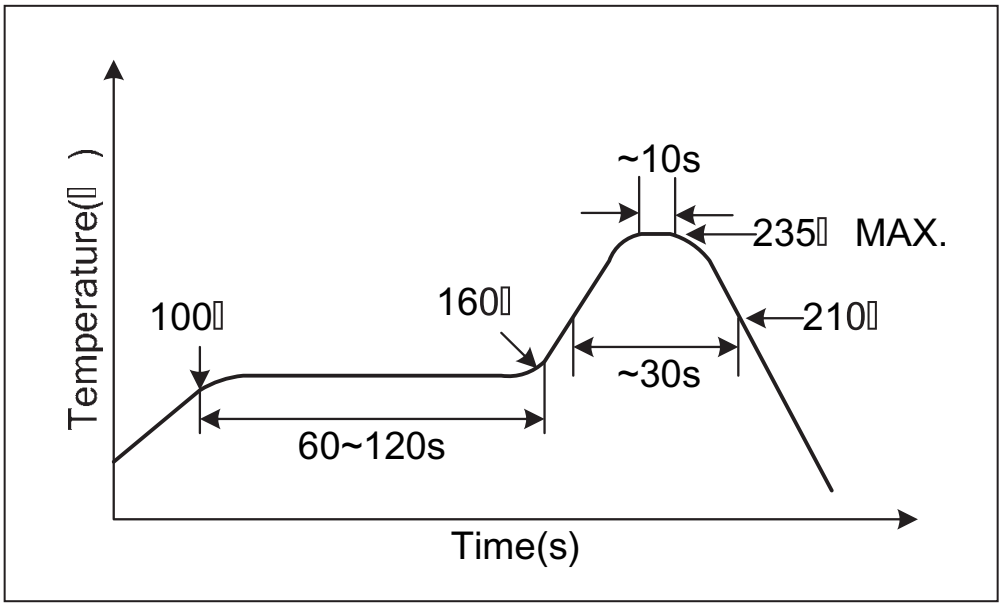

V4580 Wave Soldering Condition (suggestion)	Date	
	Made by	
	Auditor	
	Approved by	
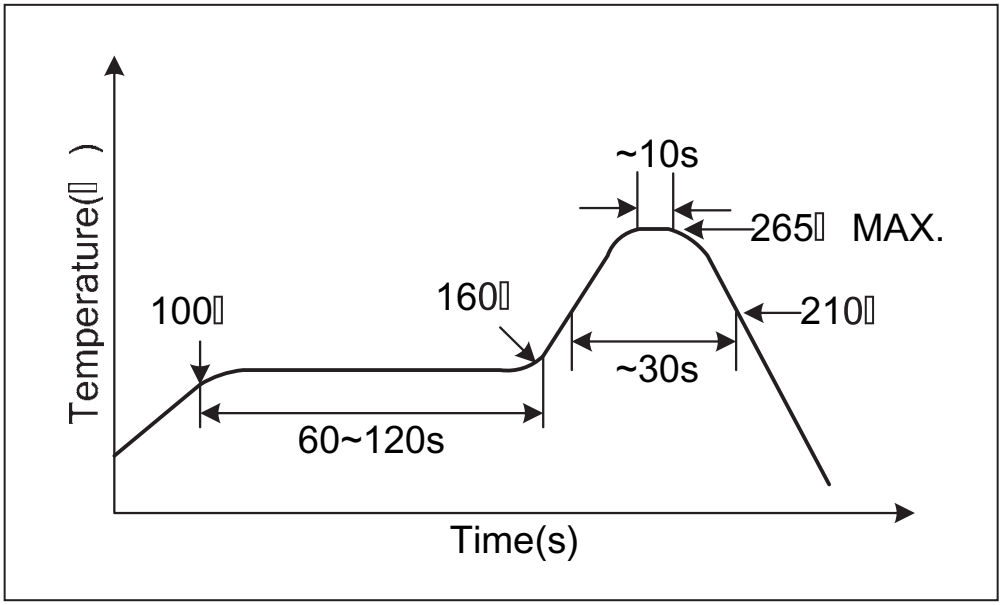
MAX. Temperature (Surface) : Below 265°C
MAX. Temperature Duration : ≤10s
Pre-heat Temperature : 120°C
Soldering Times : 1 Time