User Manual

EN

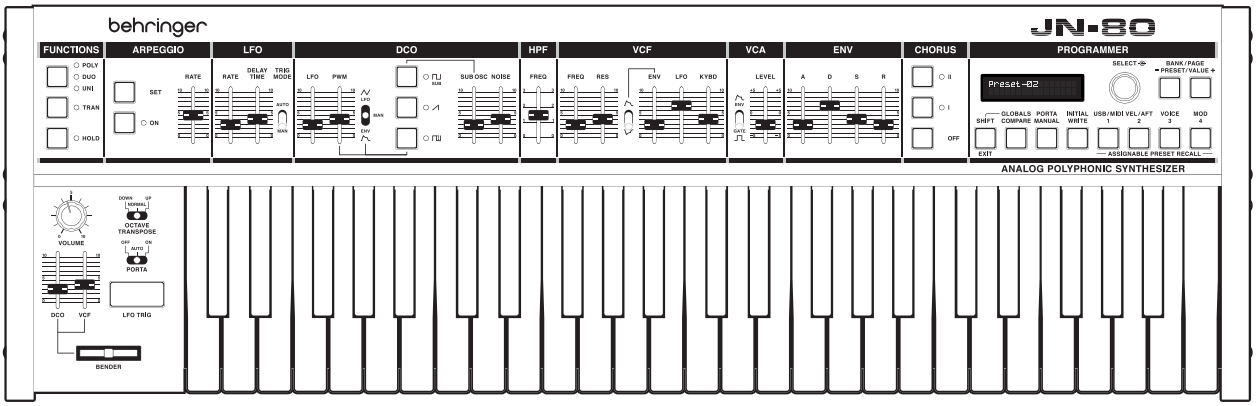

JN-80

Classic Analog 8-Voice Programmable Polyphonic Synthesizer with 3109 VCFs, BBD Chorus and 49-Key Poly Aftertouch Keyboard

V 1.0

behringer

EN

EN Important Safety Instructions

Terminals marked with this symbol carry electrical current of sufficient magnitude to constitute risk of electric shock. Use only high-quality professional speaker cables with ¼" TS or twist-locking plugs pre-installed. All other installation or modification should be performed only by qualified personnel.

This symbol, wherever it appears, alerts you to the presence of uninsulated dangerous voltage inside the enclosure - voltage that may be sufficient to constitute a risk of shock.

This symbol, wherever it appears, alerts you to important operating and maintenance instructions in the accompanying literature. Please read the manual.

Caution
To reduce the risk of electric shock, do not remove the top cover (or the rear section). No user serviceable parts inside. Refer servicing to qualified personnel.

Caution
To reduce the risk of fire or electric shock, do not expose this appliance to rain and moisture. The apparatus shall not be exposed to dripping or splashing liquids and no objects filled with liquids, such as vases, shall be placed on the apparatus.

Caution
These service instructions are for use by qualified service personnel only. To reduce the risk of electric shock do not perform any servicing other than that contained in the operation instructions. Repairs have to be performed by qualified service personnel.

Warning
Please refer to the information on the exterior of bottom enclosure for electrical and safety information before installing or operating the device.

1. Please read and follow all instructions and warnings.

2. Keep the apparatus away from water (except for outdoor products).

3. Clean only with dry cloth.

4. Do not block ventilation openings. Do not install in a confined space. Install only according to manufacturer's instructions.

5. Protect the power cord from damage, particularly at plugs and appliance socket.

6. Do not install near any heat sources such as radiators, heat registers, stoves or other apparatus (including amplifiers) that produce heat.

7. Do not defeat the safety purpose of the polarized or grounding-type plug. A polarized plug has two blades with one wider than the other (only for USA and Canada). A grounding-type plug has two blades and a third grounding prong. The wide blade or the third prong are provided for your safety. If the provided plug does not fit into your outlet, consult an electrician for replacement of the obsolete outlet.

8. Use only attachments and accessories recommended by the manufacturer.

9. Use only specified carts, stands, tripods, brackets, or tables. Use caution to prevent tip-over when moving the cart/ apparatus combination.

10. Unplug during storms, or if not in use for a long period.

11. Only use qualified personnel for servicing, especially after damage.

12. The apparatus with protective earthing terminal shall be connected to a MAINS socket outlet with a protective earthing connection.

13. Where the MAINS plug or an appliance coupler is used as the disconnect device, the disconnect device shall remain readily operable.

14. Avoid installing in confined spaces like bookcases.

15. Do not place naked flame sources, such as lighted candles, on the apparatus.

16. Operating temperature range 5° to 45°C (41° to 113°F).

LEGAL DISCLAIMER

The information contained in this Quick Start Guide and accompanying manual is provided for general guidance only. While every effort has been made to ensure the accuracy and reliability of the content at the time of publication, Music Tribe Global Brands Ltd. ("Music Tribe") makes no representations or warranties, express or implied, as to the completeness, accuracy, or suitability of the information, descriptions, illustrations, or technical specifications herein.

Music Tribe accepts no liability for any direct, indirect, incidental, or consequential loss or damage arising from reliance on the information contained in this document, including but not limited to loss of data, income, profits, or business opportunities. Use of the product remains the sole responsibility of the user.

Product features, design, specifications, and visual representations may be updated or modified without prior notice in the interest of continuous product improvement.

All third-party trademarks referenced in this guide are the property of their respective owners. Midas, Klark Teknik, Lab Gruppen, Lake, Tannoy, Turbosound, TC Electronic, TC Helicon, Behringer, Bugera, Aston Microphones, and Coolaudio are trademarks or registered trademarks of Music Tribe Global Brands Ltd.

© 2025 Music Tribe Global Brands Ltd. All rights reserved. No part of this document may be reproduced, transmitted, or used in any form or by any means without prior written permission from Music Tribe.

LIMITED WARRANTY

For the terms, conditions, and limitations applicable to your product, including coverage, exclusions, and the duration of the limited warranty, please refer to the complete Music Tribe Limited Warranty Policy, available online at: community.musictribe.com/support

Please retain your proof of purchase, as it may be required for warranty service.

EN

Table of Contents

Welcome to your JN–80 – Getting Started 4
Features 4
Recalling, Creating, and Storing Patches 4
Manual Controls 5
Rear Panel 11
MIDI CC Controllers 13
Preset Structure 15

Welcome to your JN–80 – Getting Started

Thank you for purchasing the Behringer JN–80 – the generation-defining 1980s polysynth reinvigorated.

Unpacking

Carefully unpack your JN–80. Once unpacked, inspect it closely for any signs of damage that may have occurred during transit, and notify the courier immediately if any damages are discovered.

After unpacking and inspecting the JN–80 for any damages, check the contents of your JN–80 equipment package. If any parts are missing, incorrect, or faulty, please contact your local distributor or MUSIC Tribe support directly.

The contents of this box should include the following items:

- JN–80 synthesizer
- IEC power cable
- Quick Start Guide

Please retain the original packaging in case you need to return its contents to the manufacturer or supplier, or to transport the unit at a later time.

Installation

Before installing or operating this equipment, please ensure that it is correctly connected to the protective earth conductor of the mains voltage supply socket outlet through the mains lead.

Ideally a cool area is preferred for both storage and continued use, away from power distribution equipment or other potential sources of interference.

Do not install the equipment in places with poor ventilation, nor in a location that is subjected to excessive heat, dust, or mechanical vibration.

Allow for adequate ventilation around the equipment, making sure that its fans and vents are not obstructed in any way.

When possible, keep the equipment out of direct sunlight.

Power

The internal power supplies are of the switch mode type that automatically sense the incoming mains voltage. These will work where the nominal voltage is in the range of 100 V~ to 240 V~, 50 Hz or 60 Hz.

The correct leads for connection in the area to which the unit was shipped are supplied with the unit.

The unit should only be plugged into the mains outlets using the supplied leads.

Make sure the plug fitted on the supplied mains cable is securely fitted to the mains IEC connector on the unit.

When fitting or removing a plug, always hold the plug itself, and never use the cable, as this may damage it.

Never insert or remove an electric plug with wet hands.

WARM UP TIME

We recommend leaving 15 minutes or more time for the JN–80 to warm up before recording or live performance (or even longer if it has been brought in from the cold). This will allow the precision circuits time to reach their normal operating temperature and tuned performance.

Connect the JN–80 to your mixing desk or amplifier before powering up. Power up the JN–80 first, with the volume at minimum. Power up your mixer or amplifier after powering up the JN–80. Always increase volume levels slowly. If it is necessary to tune the JN–80 to another instrument, then use the master **TUNE** control on the rear panel once the JN–80 has warmed up and is internally tuned. The **TUNE** control has a dead zone at 12 o'clock which is set at A440Hz standard tuning.

SOFTWARE SETUP

The JN–80 is a USB Class Compliant MIDI device, so no driver installation is required. The JN–80 does not require any additional drivers to work with Windows or MacOS.

FIRMWARE UPDATE

Please check the behringer.com website regularly for any updates to the Behringer SYNTH TRIBE app.

Features

- 8-voice polyphonic synthesizer with two oscillators per voice
- Saw, Pulse, and Sub Square waveforms
- Poly, Duo, Unison, Quad, and Mono voice modes
- 4-pole (24dB/oct. slope) VCF with high-pass mode
- One ADSR envelope for VCF and VCA
- Three-octave arpeggiator
- 49-key keyboard with aftertouch and velocity controls
- Five waveform LFO
- MIDI connectivity via USB and 5-pin DIN
- Foot Pedal/CV, Sustain Pedal, and headphone connectivity
- Two highly coveted built-in chorus effects that can be used independently or stacked
- Memory for up to 400 patches
- Premium factory presets **JN-80 Ultimate Patches – Volume 3** in Banks A-E courtesy of popular patch gurus Ultimate Patches (ultimatepatches.com)

Recalling, Creating, and Storing Patches

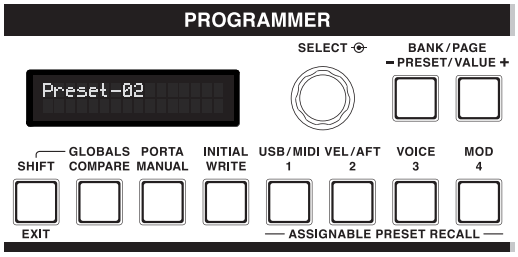

To load a preset patch, or one that you have created, hold the **SHIFT** button, then press the **BANK/PAGE** button to navigate to the desired bank (**A-T**). Once you have reached the desired bank, press forward or backward on the **+/- PRESET/ VALUE** buttons to scroll through the patches in the soundbank. The last used patch will load on power-up.

Loaded patches can be modified using the manual controls on the top panel. These will be covered below. It's important to note that the physical state of the controls on the top panel do not equate to the settings of the stored patch until the control setting is changed.

It's possible to create new patches from scratch by simply pressing the **MANUAL** button, which will put the JN–80 into manual mode. After modifying the patch, it can then be saved to memory by pressing the **WRITE** button. You can then use the **BANK/PAGE** and **+/- PRESET/VALUE** buttons to navigate to the bank and slot you would like to save the patch to.

If you change to a different patch before saving it to a slot with the **WRITE** function, then you will lose the edits you made to the patch.

Manual Controls

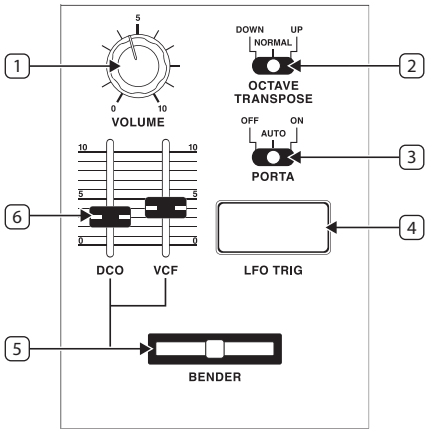

The manual controls deal with parts of the JN–80 that are universal, and thus not stored as essential parts of a preset or saved patch.

1. **VOLUME** – controls the master level of the JN–80 sent to the amplifier or mixer. We recommend powering up the JN–80 at minimum volume, and before powering up the amplifier or mixer to which it is connected.
2. **OCTAVE TRANSPOSE** – switches the octave range of the keyboard.
   1. **DOWN** – shifts the range of the keyboard one octave lower (-12 semitones) than a note's relative pitch.
   2. **NORMAL** – notes played correspond to their established pitches.
   3. **UP** – shifts the range of the keyboard one octave higher (+12 semitones) than a note's relative pitch.
3. **PORTA** – selects the portamento/glide function.
   a) **OFF** – switches the portamento/glide function in the **OFF** position.
   b) **AUTO** – switches the portamento/glide function in the **AUTO** position. **AUTO** mode is used for legato playing. In **AUTO** mode, the time between the release of one key and the press of the next key is measured. This can be adjusted via the **Legato Time TH** (threshold) parameter in the **PORTA** menu.
   c) **ON** – switches the portamento/glide function in the **ON** position. In the **ON** position, the timing and behavior of the glide function will be determined by the adjustable parameters in the **PORTA** menu.
4. **LFO TRIG** – triggers LFO modulation. Note that this functions only when the LFO **TRIG MODE** in the **LFO** section has been set to **MAN** (manual).
5. **BENDER** – used for bending the pitch of the **DCO** or for modulating the cutoff frequency of the VCF.
6. **DCO+VCF Faders**
   a) **DCO** – adjusts the pitch bend range of the **BENDER** wheel. At its highest setting (10), the **BENDER** wheel will bend the pitch up or down one octave (+12/-12 semitones).
   b) **VCF** – adjusts the **BENDER** wheel's range of modulation relative to the **VCF**'s filter cutoff frequency (**FREQ**). Note that at significantly high or low frequency settings you may need to adjust the **ENV** amount of the **VCF** for this to have a significant effect.

FUNCTIONS

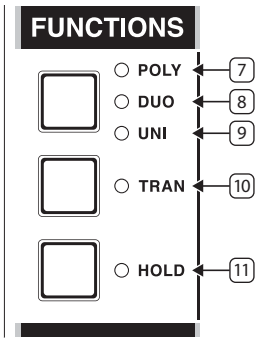

The **FUNCTIONS** section of the JN–80 deals with its primary voice settings. It additionally houses the **TRAN** (Transpose) and **HOLD** functions (see below).

7. **POLY** – sets the patch to 8-voice polyphonic mode.
8. **DUO** – sets the patch to 2-voice polyphonic mode.
9. **UNI** – sets the patch to unison mode. Unison mode is a monophonic voice setting that uses all 8 of the JN–80's voices. The number of voices used for a unison patch can however be changed via the **VOICE** menu in the **PROGRAMMER** section. The detune amount applied to the individual voices in **UNI** mode can be set via the **Detune** sub-menu in the **VOICE** menu.
10. **TRAN** – transposes a key to any other key (except for C4). Press any key from C3-C5 while holding down the **TRAN** button to transpose it to a new key. A key can be transposed up to +/-12 semitones from its original pitch. Transpositions can be saved per patch.

    When the indicator next to the **TRAN** button is blinking, you may either press a key to transpose the original key to a new one or cancel a previous transposition. When the indicator is permanently lit, this signifies that a key has been transposed. When the indicator is unlit, this signifies that the original key remains intact.

    To return to the original key, press the C4 note, or press the **TRAN** button again.
11. **HOLD** – sustains a pressed note or chord. **HOLD** can be used in conjunction with the Transpose function to transpose a whole chord. With the Arpeggio set in the **ON** position, **HOLD** will put the arpeggiator in latch mode. With **HOLD** activated, pressed notes will continue to arpeggiate even after the keys have been released.

EN

ARPEGGIO

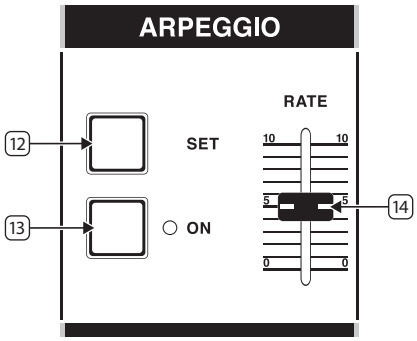

The JN–80 contains an easy-to-use yet programmable arpeggiator that can add rhythmic sequences to a patch.

12. **SET** – used to change the parameters of the arpeggiator. Press the **SET** button to view the arpeggiator's parameters on the LCD display in the **PROGRAMMER** section.
    1. **ARP MODE** – used to select the arpeggiator's mode of operation.
        a) **Up** – notes arpeggiate up from the lowest to highest key pressed (1/2/3/4/1/2/3/4, etc.).
        b) **Up/Down** – notes arpeggiate up from the lowest to highest key pressed. The highest and lowest notes of the sequence are repeated twice (1/2/3/4/4/3/2/1, etc.).
        c) **Up/Down Ex** – notes arpeggiate up from the lowest to highest key pressed and back down without repeated notes (1/2/3/4/3/2/1, etc.).
        d) **Down** – notes arpeggiate down from the highest to lowest key pressed (4/3/2/1/4/3/2/1, etc.).
        e) **Down/Up** – notes arpeggiate down from the highest to lowest key pressed. The lowest and highest notes of the sequence are repeated twice (4/3/2/1/1/2/3/4, etc.).
        f) **Down/Up Ex** – notes arpeggiate down from the highest to lowest key pressed and back up without repeated notes (4/3/2/1/2/3/4, etc.).
        g) **Random** – held notes arpeggiate randomly.
    2. **SubDivision** – sets the rhythmic value of the arpeggiated notes, relative to the **RATE** setting in the **ARPEGGIO** section, or to the BPM setting of an external clock source.
        a) **1/4** – arpeggiator runs in quarter notes.
        b) **1/4 triplet** – arpeggiator runs in quarter note triplets.
        c) **1/8** – arpeggiator runs in eighth notes.
        d) **1/8 triplet** – arpeggiator runs in eighth note triplets
        e) **1/16** – arpeggiator runs in sixteenth notes.
        f) **1/16 triplet** – arpeggiator runs in sixteenth note triplets.
        g) **1/32** – arpeggiator runs in thirty-second notes.
        h) **1/32 triplet** – arpeggiator runs in thirty-second note triplets.
    3. **Range** – sets the range of the arpeggiated sequence. The JN–80's arpeggiator can run for a maximum range of three octaves.
        a) **Held notes** – only the notes held will arpeggiate.
        b) **1 octave UP** – the arpeggiator will run for up to one octave above the highest note held.
        c) **2 octaves UP** – the arpeggiator will run for up to two octaves above the highest note held.
        d) **3 octaves UP** – the arpeggiator will run for up to three octaves above the highest note held.
    4. **Note Length** – adjusts the note length of the arpeggiated notes from 1-100. Lower settings make the arpeggiated notes increasingly more staccato, whereas higher settings make the notes increasingly more sustained.
    5. **Swing** – adjusts the swing rate of the arpeggiated sequence. 50% corresponds to a straight feel and 75% to a full shuffle/swing.
    6. **Sync Source** – sets the source used to determine the arpeggiator's rate of arpeggiation.
        a) **Internal** – arpeggiator rate is set internally via the RATE fader.
        b) **MIDI** – arpeggiator rate is taken from a MIDI device via the **MIDI IN** port.
        c) **USB** – arpeggiator rate is taken from a USB-capable device via the **USB** port.
        d) **Sync IN** – arpeggiator rate is taken from an external device that transmits clock information via the ¼" (6.35 mm) **SYNC IN** jack on the rear panel.
    7. **Sync IN PPQN** – sets the clock rate in Pulses Per Quarter Note to match the standards set by external devices (when using **Sync IN** as the Sync Source). 1 PPS (Pulse Per Second), 1 PPQN, 2 PPQN, 4 PPQN, 24 PPQN, and 48 PPQN are available.
    8. **Sync Polarity** – sets the sync polarity of the external clock signal. Rising edge, Falling edge, and Both edges are available.
    9. **Start/Stop** – used to trigger the arpeggiator to start or stop via an external device.
13. **ON** – turns the arpeggiator in the on or off position. When the indicator is lit, this signifies that the arpeggiator has been switched on.
14. **RATE** – adjusts the rate of the arpeggiator from 10-265 BPM.

LFO (Low Frequency Oscillator)

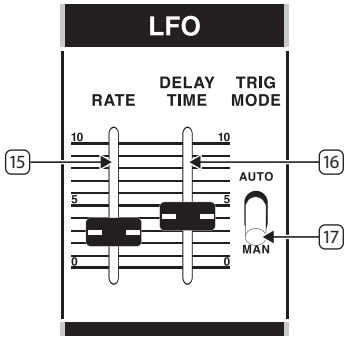

While additional controls are provided in the **MOD** menu of the **PROGRAMMER** section (see below), the **LFO** section on the front panel houses controls that determine the primary behaviors of the LFO's speed and the method for triggering it.

15. **RATE** – adjusts the modulation rate of the LFO from approximately 0.3Hz–20Hz.
16. **DELAY TIME** – sets the amount of time it takes until the **LFO** starts to modulate a parameter. This ranges from approximately 0–8 seconds. The **LFO** won't start functioning until the **DELAY TIME** setting has passed. At the lowest setting on the **DELAY TIME** fader the **LFO** will function normally and immediately.
17. **TRIG MODE** – determines how **LFO** modulation is triggered.
    a) **AUTO** – the **LFO** is triggered automatically and permanently.
    a) **MAN** – the **LFO** is triggered manually via the **LFO TRIG** button.

DCO (Digitally Controlled Oscillator)

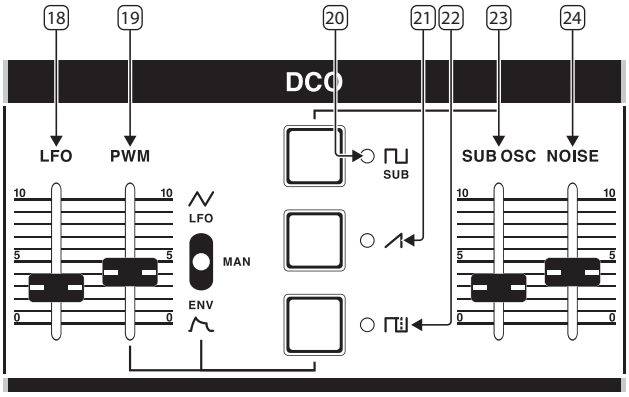

The Digitally Controlled Oscillators, in addition to the **NOISE** generator, form the basis of the JN–80's sound generation. Note that the designation "digitally controlled" does not mean that the oscillators themselves are digital, since the JN–80 is an analog synthesizer. This designation simply means that the oscillators, though entirely analog, are controlled digitally, and thus not prone to tuning instabilities.

18. **LFO** – adjusts the depth of the vibrato effect produced by the **LFO**.
19. **PWM** – adjusts the pulse width modulation duty cycle from approximately 50-95% (when PULSE is selected as an oscillator). Pulse width can be modulated in one of three ways on the JN–80. These can be selected via the **PWM** Selector Switch.
    a) **LFO** – pulse width is modulated via the **LFO**, relative to the settings in the **LFO** section.
    b) **MAN** – pulse width is modulated manually via the **PWM** fader in the **DCO** section.
    c) **ENV** – pulse width is modulated via the envelope, relative to the settings of the **ENV** section (**ADSR**).
20. **SUB** – enables a square wave that plays one octave below the note pressed.
21. **SAWTOOTH** – enables a saw wave.
22. **PULSE** – enables a pulse wave.
23. **SUB OSC** – controls the volume of the sub oscillator.
24. **NOISE** – controls the volume of the noise generator.

HPF (High Pass Filter)

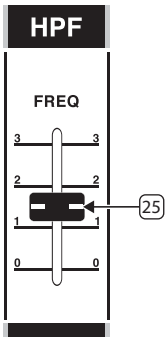

The JN–80's **VCF** contains a high-pass filter that allows high frequencies to pass and cuts low frequencies.

25. **FREQ** – sets the cutoff frequency of the **HPF**. Higher settings attenuate low frequencies and let high frequencies pass unfiltered.

VCF (Voltage-Controlled Filter)

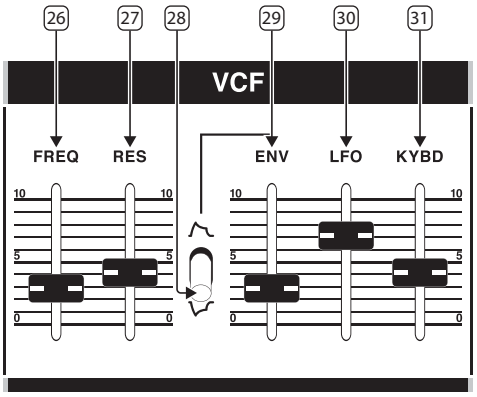

The primary function of the **VCF** (Voltage Controlled Filter) is to control the tone/timbre of the sound. The JN–80 contains a low-pass 4-pole 24dB/octave filter which can be used to attenuate high frequencies while letting low frequencies pass unfiltered. In this case, anything below the **FREQ** (cutoff) setting will be allowed to pass, depending on the **ENV** (amount) setting.

26. **FREQ** – adjusts the cutoff frequency of the **VCF**.
27. **RES** – adjusts the resonance amount (or Emphasis), emphasizing frequencies surrounding the cutoff point. When the **RESO** fader is set to its maximum level (10), the filter will self-oscillate.
28. **Polarity Switch** – switches the polarity of the Envelope's **ADSR**. In the upper position the **ADSR** will behave normally. In the lower position the **ADSR**'s polarity will be reversed. Note that higher **FREQ** and **ENV** amounts are generally required to hear the effect of reverse polarity.
29. **ENV** – adjusts the intensity (envelope amount) of the **ADSR** on the **VCF**.
30. **LFO** – adjusts the intensity of the **LFO**'s modulation effect on the filter.
31. **KYBD** – adjusts the keytracking intensity. The higher the fader value, the more the filter will open with higher pitches, and close with lower pitches.

EN

VCA (Voltage Controlled Amplifier)

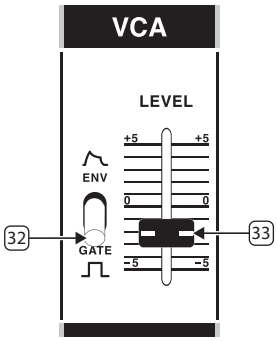

The **VCA** is used to control the level (or volume) of a patch.

32. **ADSR/GATE Switch** – switches control of the **VCA** between the signal of the Envelope Generator's **ADSR** or the **GATE** signal. The difference between the two is explained below.

    a) **ENV** – the **VCA** is controlled by the envelope settings established by the **ADSR**.

    b) **GATE** – the **VCA** ignores the envelope settings, and the voice starts/stops without being modulated by the envelope. This can be used to decouple the **VCA** from the envelope so that the **ADSR** settings will only apply to the **VCF**.

33. **LEVEL** – adjusts the amplitude of the **VCA**.

ENV (Envelope Generator)

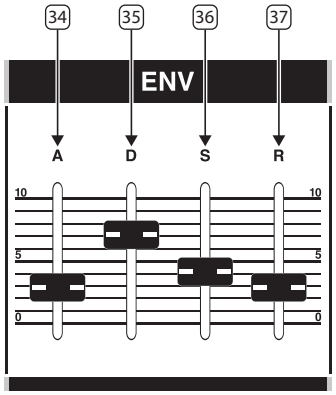

The JN–80's Envelope Generator is what determines the behavior of a sound or patch over time. The JN–80 contains one four-stage envelope generator (**ADSR**) that is used to control both the **VCF** and the **VCA**.

Each stage's behavior is exponential, with the **ATTACK**, **DECAY**, and **RELEASE** stages ranging from approximately 0 milliseconds at the lowest setting on the fader (0) to 12 seconds at the highest setting (10), and 750 milliseconds at the middle position.

34. **A (Attack)** – adjusts the Attack time of the Envelope Generator's **ADSR**. This controls the amount of time it takes for the sound to go from 0 to its maximum level.

35. **D (Decay)** – adjusts the Decay time of the Envelope Generator's **ADSR**. This determines the amount of time it takes for the level of the envelope generator to fall back down to the level set by the **SUSTAIN** stage.

36. **S (Sustain)** – adjusts the Sustain level of the Envelope Generator's **ADSR**. This determines the level of the **VCA/VCF** after the **DECAY** cycle has finished.

37. **R (Release)** – adjusts the Release time of the Envelope Generator's **ADSR**. This controls the amount of time it takes for the sound to reach 0 once the key has been released.

CHORUS

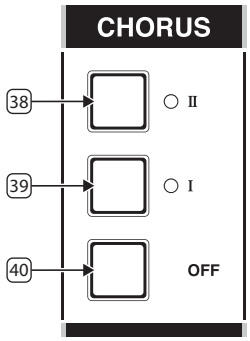

At the end of the JN–80's signal chain are two vintage chorus units that can make sounds both richer and thicker. The two can be used independently of one another or stacked for greater effect. When stacked, the depth of the chorus effect is decreased while the rate is increased.

38. **II** – activates a more extreme sounding Chorus effect that has a relatively fast rate of modulation when compared with **I**.

39. **I** – activates a more subtle, slower Chorus effect than **II**.

40. **OFF** – turns the Chorus effect off.

PROGRAMMER

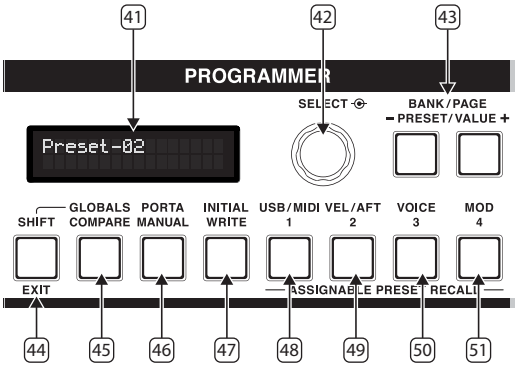

The **PROGRAMMER** is the primary section of the JN–80 for defining the behavior of a sound beyond the manual controls that are immediately available on the front panel. It's where the JN–80's GLOBAL settings, velocity and aftertouch data, modulation settings, and functions for use with external hardware and software all reside. It's also where you search soundbanks for patches or create and save patches of your own.

41. **PROGRAM DISPLAY** – displays the current preset, parameters, and values when using menus.

42. **SELECTOR** – used for scrolling presets and menus, and for changing the values of individual parameters. To select a menu item on the display, scroll to it with the **SELECTOR** knob and press down on the knob.

43. **± PRESET/VALUE** – used to scroll through presets and to navigate back and forth between menu items, sub-menu items, functions, and parameters. Can also be used to access the **BANK/PAGE** function when holding down the **SHIFT** button.

44. **SHIFT/EXIT** – used to select upper menu items when held and to exit the current menu when pressed once.

45. **GLOBALS/COMPARE** – accesses **GLOBALS** menu (with the **SHIFT** button held) or the **COMPARE** function (without the **SHIFT** button held).

    1. **GLOBALS** – contains a range of menu items relating to the general functioning of the JN-80.

Menu Item	Function	Description	Values
LCD Display	Brightness	Adjusts LCD Brightness	10-100%
	Contrast	Adjusts LCD Contrast	10-100%
	Disp Timeout	Sets timeout for LCD	10 seconds, 1 Minute, 5 Minutes, None
Calibration	Calibrate Synth	Calibrates the JN–80	One-time action
	Bender Cal	Lets the user calibrate the **BENDER** wheel	Set Range
Keybed	Velocity Curve	Adjusts the keybed velocity curve. Higher percentages correspond to a greater curve	0-100%
	AFT (Aftertouch Curve)	Adjusts the aftertouch curve. Higher percentages correspond to reduced aftertouch sensitivity	0-100%
	HOLD Mode	Sets the **HOLD** Mode function	Refresh notes (new notes are held, eliminating previously held notes)
			Add New Notes (new notes added until maximum number of voices is exceeded)
Presets/ Param	Param Update	Makes it possible to lock a patch to avoid changes from being made unless parameters are adjusted significantly	Join – all fader movements are blocked from changing the patch until considerable adjustments are made
			Immediate – all fader movements take effect once moved
	Recall Mode	Determines how patches are assigned to one of the 4 **ASSIGNABLE PRESET RECALL** buttons	Global – any patch may be assigned by loading the patch and holding one of the ASSIGNABLE PRESET RECALL buttons for 2 seconds
			Per Bank – assign any patch from the active soundbank by loading the patch and holding the assign button for 2 seconds. This allows for a total of 80 assignable presets
			First 4 per Bank – the first 4 patches of the active bank are assigned to the **ASSIGNABLE PRESET RECALL** buttons
Fan Speed	...	Adjusts the fan speed	AUTO, Slow, Mid, Fast, OFF

    2. **COMPARE** – lets you compare the edited version of a patch to its stored value. When patches have been edited, this will be shown in the LCD display, which will be shown as "EDITED." When a patch has been loaded, the value will be shown as "LOADED."

46. **PORTA/MANUAL** – (**SHIFT**+press) to access controls for portamento/glide.

    1. **PORTA**

Menu Item	Function	Description	Range
Porta Mode	...	Changes the portamento mode of operation	Fixed Time (portamento rate is determined by set Glide Time: 0 ms-5070 ms)
			Fixed Rate (portamento rate is determined by set Glide Speed: 0-100%)
Porta Time	...	Adjusts the amount of time it takes to glide from one note/ chord to the next	0 ms-5070 ms
Porta Rate	...	Adjusts the fixed rate of glide from one note/chord to the next	0-100%
Legato Time TH (threshold)	...	Adjusts the time in milliseconds for a noteOff –> noteOn message to be considered legato	50ms-250ms

    2. **MANUAL** – puts the JN-80 into MANUAL mode, in which manual control can be taken over a preset and saved or recalled for later use.

47. **INITIAL/WRITE** – (**SHIFT**+press) accesses initialization settings.

    1. **INITIAL** – contains a range of initialization settings.

Menu Item	Function	Description	Range
Init Preset	...	Sets current preset slot to default values	...
Set Fact Presets	...	Initializes all presets to their factory states	...
Init Settings	...	Initializes factory settings	...
Dump Presets	...	Sends all patches in memory as SYSEX messages to the PC via USB	...

    2. **WRITE** – Used to write and save new patches. To save a patch, first click on **WRITE**, then choose the desired soundbank using the **BANK/PAGE** buttons. Once the desired soundbank has been selected, scroll to the desired patch number using the **SELECT** encoder. Once you press down on the **SELECT** encoder to choose a patch number, you can then name the patch using the **SELECT** encoder and **PRESET/VALUE** buttons to move forward or backward.

48. **USB/MIDI** – (**SHIFT**+press) contains a range of parameters to facilitate USB/ MIDI integration.

Menu Item	Function	Description	Range
Channels	Receive	Sets received channels	All channels, channels 1–16
	Transmit	Sets transmitted channels	Off, channels 1–16
CC Settings	...	Sets CC DATA preferences	Off, Receive, Transmit, Receive+Transmit
PC Settings	...	Sets PC DATA preferences	OFF, Receive, Transmit, Receive+Transmit
Keyboard forward	...	Sets data sent by keyboard	OFF, USB, MIDI, USB+MIDI
Pedal Polarity	...	Sets Pedal Polarity	Active High, Active low, Auto
Local Enable	...	Allows the keyboard and onboard sound generation to be used independently of each other and disables the JN–80's surface from the synth engine	OFF – keyboard will transmit MIDI data, but will not trigger the synth itself
			ON – keyboard will trigger the synth
Soft Thru	...	Passes incoming MIDI data through a MIDI output to avoid loops	OFF, ON

EN

49. **VEL/AFT** – (**SHIFT**+press) contains a range of controls for Velocity and Aftertouch messages.

Menu Item	Function	Description	Range
Velocity	VEL ENV MOD	Adjusts the extent to which velocity modulates the VCA envelope	0–100%
	VEL VCF MOD	Adjusts the extent to which velocity modulates the VCF	0–100%
	VEL VCA MOD	Adjusts the extent to which velocity modulates the VCA	0–100%
After Touch	AFT ENV SUS	Adjusts the extent to which aftertouch controls the VCA sustain level	0–100%
	AFT VCF MOD	Adjusts the extent to which aftertouch modulates the cutoff frequency of the VCF	0–100%
	AFT PWM MOD	Adjusts the extent to which aftertouch modulates pulse width modulation	0–100%
	AFT LFO – > DCO	Adjusts the extent to which aftertouch modulates the pitch of the DCO via the LFO	0–100%
	AFT LFO – > VCF	Adjusts the extent to which aftertouch modulates the cutoff of the VCF via the LFO	0–100%
	AFT LFO Rate	Adjusts the extent to which aftertouch quickens the RATE of the LFO	0–100%

50. **VOICE** – (**SHIFT**+press) contains a range of controls for establishing voice preferences.

Menu Item	Function	Description	Range
Voice Assign	...	Sets the voice amount	Poly, Duo, Uni, Quad, Mono
Note Priority	...	Assigns note priority when exceeding voice amount	High, Low, New
Detune	...	Adjusts the detune amount in **UNI**, **DUO**, and **QUAD** modes.	0–100%
Voice Spread	...	Adjusts the pitch drift amount in **POLY** mode	0–100%
Reassign Mode	...	Establishes the voice assignment behavior when the same note is pressed.	Same Voice – the same voice is reused
			Next Voice – the next available voice is used until all voices have been allocated
Voice Setup	Voices 1-8	Kill or unkill a voice	Not killed – voice remains in use
			Killed – voice is no longer in use

51. **MOD** – (**SHIFT**+press) contains a range of controls for establishing modulation preferences.

Menu Item	Function	Description	Range
LFO Settings	LFO Shape	Selects the shape of the LFO	Triangle, Pulse, Ramp Up, Ramp Down, Sinus
	Del Ramp Speed	Adjusts the shape of the LFO's DELAY TIME Ramp	0–100%
	LFO ReTrigger	Allows you to re-trigger the LFO each time a new note or chord is played	OFF, ON
	LFO Sync	Syncs the LFO period to the current BPM setting, with 1 equaling one LFO period per the BPM setting: 1 at 60 BPM=1 LFO period every 60 beats, etc.	Off, 8, 4, 2, 1, 12/16, 8/16, 4/16, 2/16, 1/16
Pedal/CV MOD	VCF Amount	Adjusts the extent to which the expression pedal/CV modulation device modulates the **VCF**'s cutoff frequency	0–100%
	VCA Amount	Adjusts the extent to which the expression pedal/CV modulation device modulates the **VCA** level	0–100%
MOD Wheel	MOD W. LFO-DCO	Adjusts the LFO-DCO modulation route intensity for use with an external modulation wheel	0–100%
	MOD W. LFO-VCF	Adjusts the LFO-VCF modulation route intensity for use with an external modulation wheel	0–100%
Envelope	ENV D/R Type	Sets the curve of the Envelope generator	Exponential, Linear
	ENV Re-Trigger	Defines how the envelope functions when a voice is reassigned	ON – the envelope starts from ZERO
			OFF – the envelope maintains its previous value

EN

Rear Panel

The rear panel of the JN–80 Is where you'll find all its necessary connections for power, external modulation devices, and communication with other devices. There are additionally two air vents for cooling. Always make sure to keep ample space behind the JN-80 to avoid blocking the cooling vents and to allow cables to rest freely without being bent or placed in ports improperly.

1. **POWER** – switches the JN–80 in the on (I) or off (O) position.
2. **AC IN** – connect the supplied AC power cable here.
3. **USB** – connect to a computer for firmware updates and for use with a DAW.
4. **MIDI IN** – input MIDI data from an external MIDI device (sequencer or DAW, etc.).
5. **MIDI OUT** – output MIDI data to an external MIDI device.
6. **MIDI THRU** – output of the MIDI IN signal to chain to other MIDI devices.
7. **PEDAL/CV** – input for an Expression Pedal.
8. **SUSTAIN** – input for a Sustain Pedal.
9. **PHONES** – connection for headphones via ¼"/ 6.35mm TRS cable.
10. **MAIN OUT L/R** – main output via ¼"/ 6.35mm TRS cable. Use the Left (L) channel for MONO.
11. **SYNC** – sync in port to synchronize with external clocks via ¼"/6.35 mm TRS cable.
12. **TUNE** – used for fine-tuning the JN–80. With the rear panel facing you, turn the **TUNE** knob to the left to make the note flatter, and to the right to make the note sharper.

Glossary

ADSR – The stages of a four-stage envelope: Attack, Decay, Sustain, and Release.

Amplitude – The level (volume) of a sound.

Aftertouch – MIDI data sent when pressure is applied to held keys.

Arpeggiator – A device or part of a synthesizer that creates rhythmic arpeggiations from chords or notes.

Attack – The first stage of an Envelope Generator. Controls the amount of time it takes for a sound to go from 0 to its maximum level.

Attenuate – To reduce the level or volume of a signal.

Bank – A curated collection of sounds/presets.

Bender – A device used to alter the pitch of one or more oscillators or the filter cutoff point, etc. Normally contains a fixed central position.

Channel – A passageway for receiving or transmitting messages.

Chorus – An effect that is created when numerous copies of a sound or signal are played simultaneously slightly out of time and pitch with each other so that a shimmering and thickening effect is created.

Clock – A Pulse waveform signal used to determine the rhythm of a piece of music, usually measured in beats per minute (BPM).

Coarse Tuning – The tuning of a patch measured in semitone steps.

Control Voltage (CV) – Used by analog synthesizers to control its components.

Cutoff – The point at which a filter starts to attenuate certain frequencies.

Decay – The second stage of an Envelope Generator. Determines the amount of time it takes for a sound to drop from its maximum level to the level set by the Sustain stage.

DAW (Digital Audio Workstation) – Software used to record and edit audio files and MIDI data.

DCO (Digitally Controlled Oscillator) – Oscillators that are controlled by digital input signals, as opposed to a voltage-controlled input.

Duophonic – A synthesizer (or voicing) where two notes can be played at the same time.

Encoder – An input device used to change data, edit values, and adjust parameters, etc. Encoders normally contain an infinite range.

Envelope (ENV) – A waveform that evolves over time. Envelopes require either a trigger or a gate to function. Normally used to control amplitude or the filter of a synthesizer.

Fader – A device used for gradually adjusting the parameters or value of a signal.

Filter – Attenuates frequencies above or below the cutoff point. The exact behavior of each filter depends on the type used.

Fine Tuning – The tuning of a patch measured in Cents (1/100th of a semitone).

Frequency – The number of times per second that a wave cycle repeats. Greater frequencies with faster rates result in higher perceived pitches, and lesser frequencies with slower rates result in lower perceived pitches.

Global – Parameters that are universal to the synth, thus affecting all patches.

Hertz (Hz) – A unit of measurement used for frequency information.

High-Pass Filter (HPF) – A filter that attenuates low frequencies and allows frequencies higher than the cutoff point to pass. Synonymous with low-cut filter.

Hold – A type of message that causes pitch or rhythmic value, etc. to remain in its current state without additional input.

Initialize – To restore a patch or synthesizer to its original format/settings.

Invert – To put something upside down, in the opposite arrangement, order, or position.

Keyboard – A set or group of keys that are arranged in order of ascending pitch.

Keybed – The rail that stops the downward movement of the keys on a keyboard.

Keytracking – Messaging that allows the keyboard itself to be used as a modulation source. Normally this is used to open the filter with higher keys and close it with lower keys.

KiloHertz (kHz) – An abbreviation used for one thousand Hertz (Hz).

Legato – When notes are played smoothly from one to another, without any breaks in between.

EN

Level – Another term used to describe amplitude.

LFO (Low Frequency Oscillator) – An oscillator that operates at a lower frequency than the audible frequency range. Used as a modulation source.

Low-Pass Filter (LPF) – A filter that lets signals below the cutoff frequency pass while attenuating frequencies above it. Synonymous with high-cut filter.

Memory – The usable storage space/process used for storing and creating sounds on a synthesizer.

MIDI (Musical Instrument Digital Interface) – The messaging protocol used for musical instruments and other devices to communicate with one another.

MIDI Control Change/Continuous Controller (CC) – A MIDI message consisting of a MIDI channel, controller number, and controller value (0-127) for controlling the parameters of a digital instrument.

Modulation (MOD) – The use of a source to add variation, dynamics, and expression to a destination parameter.

Modulation Wheel (MOD Wheel) – A wheel of a keyboard or MIDI device that lets you modulate parameters in real time.

Monophonic – A synthesizer or patch where only one voice can be used.

Noise Generator – A source of CV fluctuations that outputs all frequencies distributed at random throughout the frequency spectrum.

Octave – The interval between a frequency and its double or half value. In semitones, octaves are measured as +12 or -12.

Oscillator – A circuit that generates frequencies within the audible range. Oscillators are the building blocks of sound design and synthesis.

Parameter – A setting that can be changed manually or via control voltage (CV) input.

Patch – Any sound made from a combination of oscillators or samples and filters, envelopes, effects, and modulations. Patches can be pre-programmed or built from scratch.

Pitch – Synonymous with frequency. Often measured in semitones on synthesizers.

Pitch-Bend – Modulation of a pitch when held. Usually accomplished via a pitch-bend wheel, joystick, or keyboard aftertouch.

Polarity – The direction of circuitry in terms of positive and negative values.

Polysynth – A polyphonic synthesizer that can play more than one note or sound at a time.

Portamento (PORTA) – The sweeping of one note pitch to another. The rate at which this happens is normally controlled by a knob or switch. Synonymous with Glide.

Preset – A sound or patch that is pre-programmed into a synthesizer's available memory.

Pulse Wave (Pulse) – Similar to a standard square wave, with the added ability to modulate between the crest and trough of the waveform through Pulse Width Modulation (PWM).

Pulse Width – The time duration that the pulse wave remains at its maximum amplitude.

Pulse Width Modulation (PWM) – The modulation of pulse width via an LFO, envelope generator, or other modulation source.

Resonance – A boosting of frequencies surrounding the cutoff point of the filter.

Sawtooth (Saw) – A waveform characterized by a rapid rise or fall, followed by a gradual linear decline or incline.

Semitone – A stepped unit of measurement used for pitch information. Determines the coarse tuning of a synth or patch. Equivalent to 100 cents in fine tuning.

Staccato – When notes are played sharply and detached from one another.

Synchronization (Sync) – The locking of a tempo or clock setting from one instrument to another.

Tempo – The speed of a piece of music or song, measured in Beats Per Minute (BPM).

Threshold – The level that needs to be passed before an effect is activated.

Timbre – The character and quality of a sound.

Transpose – The ability to shift one key to another in semitone increments.

Unison (UNI) – A monophonic patch that uses two or more voices at the same pitch.

USB – A method of connecting and sending/receiving messages from external devices to personal computers.

Waveform (Wave) – The display of the behavior of a sound pressure wave over time.

Velocity – MIDI data that responds to the attack of a trigger. Normally used to control volume.

Vibrato – A modulation effect that creates a wavering or wobbling effect in the pitch of a tone.

Voice – One or more sounds created by an oscillator or group of oscillators. Determines how many notes can be played simultaneously.

Voltage Controlled Amplifier (VCA) – An amplifier that varies the gain of a signal depending on control voltage.

Voltage Controlled Filter – A standard filter, the frequency of which is controlled by external voltages.

EN

MIDI CC Controllers

JN-80 - MIDI CC Table

CC Num	Hex	Continuous - Coarse	Stepped params	MIDI standard
0	0			Bank Select
1	1			MOD Wheel
2	2			Breath Controller
3	3			Undefined
4	4			Foot Pedal
5	5			Portamento Time
6	6			NRPN Data MSB
7	7			Volume
8	8	LFO Rate		Balance
9	9	LFO Delay		Undefined
10	A	DCO LFO Modulation		Pan
11	B			Expression
12	C	DCO PWM duty cycle		Effect Controller 1
13	D	DCO SUB Amount		Effect Controller 2
14	E	DCO Noise		Undefined
15	F	ARP Rate		Undefined
16	10	VCF Resonance		General Purpose
17	11	VCF ENV Modulation		General Purpose
18	12	VCF LFO Modulation		General Purpose
19	13	VCF Key Modulation		General Purpose
20	14	VCA Level		Undefined
21	15	Envelope Attack		Undefined
22	16	Envelope Decay		Undefined
23	17	Envelope Sustain		Undefined
24	18	Envelope Release		Undefined
25	19	VCF Frequency		Undefined
26	1A	HPF		Undefined
27	1B	LFO Delay Ramp Ratio		Undefined
28	1C	Velocity ENV Modulation		Undefined
29	1D	Aftertouch ENV Modulation		Undefined
30	1E	Aftertouch LFO-DCO MOD Amount		Undefined
31	1F	Aftertouch LFO Rate MOD		Undefined
32	20	Arp Note Length		LSB Controller for 0-31
33	21	Arp Swing		LSB Controller for 0-31
34	22	Bender DCO Modulation		LSB Controller for 0-31
35	23	Bender VCF Modulation		LSB Controller for 0-31
36	24			LSB Controller for 0-31
37	25	Portamento Time		LSB Controller for 0-31
38	26			NRPN Data LSB
39	27		LFO Mode	LSB Controller for 0-31
40	28		DCO Pulse	LSB Controller for 0-31
41	29		DCO SAW	LSB Controller for 0-31
42	2A		DCO SUB	LSB Controller for 0-31
43	2B		VCF ENV MOD Invert	LSB Controller for 0-31
44	2C		VCA ENV Gate	LSB Controller for 0-31

JN-80 - MIDI CC Table

CC Num	Hex	Continuous - Coarse	Stepped params	MIDI standard
45	2D		DCO PWM MOD Source	LSB Controller for 0-31
46	2E		Chorus	LSB Controller for 0-31
47	2F		Voice Allocation Mode	LSB Controller for 0-31
48	30		LFO Sync	LSB Controller for 0-31
49	31		LFO Shape	LSB Controller for 0-31
50	32		Porta Mode	LSB Controller for 0-31
51	33		Arp ON	LSB Controller for 0-31
52	34		Arp Mode	LSB Controller for 0-31
53	35		Arp Range	LSB Controller for 0-31
54	36		Arp Div	LSB Controller for 0-31
55	37	Detune		LSB Controller for 0-31
56	38		Portamento Time Mode	LSB Controller for 0-31
57	39	Aftertouch VCF MOD Amount		LSB Controller for 0-31
58	3A	Velocity VCF MOD Amount		LSB Controller for 0-31
59	3B	Aftertouch LFO-VCF MOD Amount		LSB Controller for 0-31
60	3C	MOD Wheel to LFO-DCO MOD Amount		LSB Controller for 0-31
61	3D	MOD Wheel to LFO-VCF MOD Amount		LSB Controller for 0-31
62	3E	Voice Spread		LSB Controller for 0-31
63	3F	Aftertouch PWM MOD Amount		LSB Controller for 0-31
64	40			Damper Pedal On/Off
65	41			Portamento On/Off
66	42			Sostenuto Pedal On/Off
67	43			Soft Pedal On/Off
68	44			Legato Footswitch
69	45			Hold 2
70	46			Sound Controller 1
71	47			Sound Controller 2
72	48			Sound Controller 3
73	49			Sound Controller 4
74	4A			Sound Controller 5
75	4B			Sound Controller 6
76	4C			Sound Controller 7
77	4D			Sound Controller 8
78	4E			Sound Controller 9
79	4F			Sound Controller 10
80	50			General Purpose MIDI CC Controller
81	51			General Purpose MIDI CC Controller
82	52			General Purpose MIDI CC Controller
83	53			General Purpose MIDI CC Controller
84	54			Portamento CC Control

EN

JN-80 - MIDI CC Table

CC Num	Hex	Continuous - Coarse	Stepped params	MIDI standard
85	55		Note priorty	Undefined
86	56		Same Note Assignment	Undefined
87	57		LFO Re-Trigger	Undefined
88	58			High Resolution Velocity Prefix
89	59		ENV Decay/ Release mode	Undefined
90	5A	Velocity to VCA Modulation		Undefined
91	5B		Octave Transpose	Effect 1 Depth
92	5C		Key Transpose	Effect 2 Depth
93	5D		Envelope Re-Trigger	Effect 3 Depth
94	5E	Expression VCF Modulation		Effect 4 Depth
95	5F	Expression ENV Modulation		Effect 5 Depth
96	60			NRPN Data increment
97	61			NRPN Data decrement
98	62			NRPN Param LSB
99	63			NRPN Param MSB
100	64			RPN Param LSB
101	65			RPN Param MSB
102	66			Undefined
103	67			Undefined
104	68			Undefined
105	69			Undefined
106	6A			Undefined
107	6B			Undefined
108	6C			Undefined
109	6D			Undefined
110	6E			Undefined
111	6F			Undefined
112	70			Undefined
113	71			Undefined
114	72			Undefined
115	73			Undefined
116	74			Undefined
117	75			Undefined
118	76			Undefined
119	77			Undefined
120	78			All sounds off
121	79			Reset All Controllers
122	7A			Local on/off Switch
123	7B			All notes off
124	7C			Omni Mode Off
125	7D			Omni Mode On
126	7E			Mono Mode
127	7F			Poly Mode

EN

Preset Structure

Sysex Header:

Brand ID, 3 bytes				Product ID, 3 bytes			CPU ID	CMD	Address first 7 bits	Address last 7 bits		
0xF0	0x00	0x20	0x32	0x00	0x01	0x1D	0x00	0x78 - Write	Write Address low	Write Address high	<DATA>	0xF7
0xF0	0x00	0x20	0x32	0x00	0x01	0x1D	0x00	0x77 - Read	Read Address low	Read Address high	0xF7	

Storage Address	0/399	7 + 7 bits	Bank* 20+Num	A: 0-19	B:20-39	C:40-59	D:60-79	D:60-79	Etc.

<DATA> Must be coded to 7 bits

Position	Size (bytes)	Byte Num	Preset Version	Category	Parameter	Value Range	Description								
	4	0	–	–	Storage Code	0x006116A5									
	1	4	–	–	Preset Version	0/127	Version of the Preset Structure								
0	1	5	0	Patch Info	Bank Number	0/19	A to T - 20 Banks								
1	1	6	0	Patch Info	Number	0/19	20 Presets per Bank								
2	1	7	0	Patch Info	Name 0	ascii char									
3	1	8	0	Patch Info	Name 1	ascii char									
4	1	9	0	Patch Info	Name 2	ascii char									
5	1	10	0	Patch Info	Name 3	ascii char									
6	1	11	0	Patch Info	Name 4	ascii char									
7	1	12	0	Patch Info	Name 5	ascii char									
8	1	13	0	Patch Info	Name 6	ascii char									
9	1	14	0	Patch Info	Name 7	ascii char									
10	1	15	0	Patch Info	Name 8	ascii char									
11	1	16	0	Patch Info	Name 9	ascii char									
12	1	17	0	Patch Info	Name 10	ascii char									
13	1	18	0	Patch Info	Name 11	ascii char									
14	1	19	0	Patch Info	Name 12	ZERO									
15	1	20	0	Voice	Voice Allocation Mode	0=Poly	1=Duo	2=Uni	3= Hex	4=Quad					
16	1	21	0	Voice	Note Priority	0/2	0=HIGH	1=LOW	2=NEW						
17	1	22	0	Voice	Same Note, Reassign Mode	0= Same Voice	1=Next Voice								
18	2	23	0	LFO	LFO Rate	0/4095									
19	2	25	0	LFO	LFO Delay	0/4095									
20	1	27	0	LFO	LFO Mode	0=Auto	1=Manual								
21	1	28	0	LFO	LFO Shape	0=Triangle	1=Pulse	2=Ramp Up	3=Ramp Down	3= Sinus					
22	1	29	0	LFO	LFO Delay Ramp Ratio	0/127									
23	1	30	0	LFO	LFO Re-Trigger	0=OFF	1=ON								
24	1	31	0	LFO	LFO Sync	0= OFF	1=8 BPM	2=4 BPM	3=2 BPM	4=1 BPM	5=12/16 BPM	6=8/16 BPM	7=4/16 BPM	8=2/16 BPM	9=1/16 BPM
25	2	32	0	DCO	DCO LFO Modulation	0/4095									
26	2	34	0	DCO	DCO PWM Duty Cycle	0/4095									
27	1	36	0	DCO	DCO PWM Modulation Source	0=LFO	1=Manual	2=Envelope							

EN

Position	Size (bytes)	Byte Num	Preset Version	Category	Parameter	Value Range	Description								
28	1	37	0	DCO	DCO Pulse	0=OFF	1=ON								
29	1	38	0	DCO	DCO Saw	0=OFF	1=ON								
30	1	39	0	DCO	DCO Sub	0=OFF	1=ON								
31	2	40	0	DCO	DCO Sub Amount	0/4095									
32	2	42	0	DCO	DCO Noise	0/4095									
33	2	44	0	HPF	High Pass Filter	0/4095									
34	2	46	0	VCF	VCF Frequency	0/4095									
35	2	48	0	VCF	VCF Resonance	0/4095									
36	2	50	0	VCF	VCF Envelope Modulation	0/4095									
37	2	52	0	VCF	VCF LFO Modulation	0/4095									
38	2	54	0	VCF	VCF Keybed Modulation	0/4095									
39	1	56	0	VCF	VCF Envelope Mode Inverted	0=Normal	1=Inverted								
40	2	57	0	VCA	VCA Level	0/4095									
41	1	59	0	VCA	VCA Envelope/ Gate	0=Gate	1=Envelope								
42	2	60	0	Envelope	Attack	0/4095									
43	2	62	0	Envelope	Decay	0/4095									
44	2	64	0	Envelope	Sustain	0/4095									
45	2	66	0	Envelope	Release	0/4095									
46	1	68	0	Envelope	Decay Release Type	0= Exponential	1= Linear								
47	1	69	0	FX	Chorus	0=OFF	1=I	2=II	3=I + II						
48	1	70	0	Arpeggiator	ARP On	0=OFF	1=ON								
49	1	71	0	Arpeggiator	ARP Mode	0=Up	1=Up/ Down	2=Up/ Down Ex	3=Down	4=Down/Up	5=Down/ Up EX	6= Random			
50	1	72	0	Arpeggiator	ARP Range	0=Held Notes	1=plus 1 oct	2=plus 2 oct	3=plus 3 oct						
51	1	73	0	Arpeggiator	ARP Note Length	0/100									
52	1	74	0	Arpeggiator	ARP Swing	50/127									
53	2	75	0	Arpeggiator	ARP Rate	1200/4095									
54	1	77	0	Arpeggiator	ARP Division	0=1/4	1=1/4 Triplet	2=1/8	3=1/8 Triplet	4=1/16	5=1/16 Triplet	6=1/32	7=1/32 Triplet		
55	1	78	0	Portamento	Portamento Mode	0=Auto	1=OFF	2=ON							
56	1	79	0	Portamento	Portamento Time	0/127									
57	1	80	0	Portamento	Portamento Time Mode	0=Time	1=Speed								
58	1	81	0	Velocity	Velocity Envelope Modulation	0/127									
59	1	82	0	Velocity	Velocity VCF Modulation	0/127									
60	1	83	0	Aftertouch	Aftertouch Envelope Modulation	0/127									

EN

Position	Size (bytes)	Byte Num	Preset Version	Category	Parameter	Value Range	Description								
61	1	84	0	Aftertouch	Aftertouch VCF Modulation	0/127									
62	1	85	0	Aftertouch	Afterouch PWM Modulation	0/127									
63	1	86	0	Aftertouch	Aftertouch LFO Rate Modulation	0/127									
64	1	87	0	Aftertouch	Aftertouch LFO to DCO Amt MOD	0/127									
65	1	88	0	Aftertouch	Aftertouch LFO to VCF Amt MOD	0/127									
66	2	89	0	Bender	Bender DCO Modulation	0/4095									
67	2	91	0	Bender	Bender VCF Modulation	0/4095									
68	1	93	0	VCF	Expression VCF Modulation	0/127									
69	1	94	0	Envelope	Expression ENV Modulation	0/127									
70	1	95	0	Voice	Detune	0/127									
71	1	96	0	Voice	Voice Spread	0/127									
72	1	97	0	MOD Wheel	Wheel MOD LFO to DCO	0/127									
73	1	98	0	MOD Wheel	Wheel MOD LFO to VCF	0/127									
74	1	99	1	Velocity	Velocity VCA Modulation	0/127									
75	1	100	1	Transpose	Octave Transpose	0/2	0=none	1=up 1	2= down 1						
76	1	101	1	Transpose	Keyboard Transpose	0/24	Trans = Value-12	-12 ST	0 ST	12 ST					
77	1	102	1	Envelope	Envelop Re-Trigger	0=OFF	1=ON								

EN

FEDERAL COMMUNICATIONS COMMISSION COMPLIANCE INFORMATION

Behringer

JN-80

Responsible Party Name:	**Empower Tribe Innovations US Inc.**
Address:	**901 Grier Dr. Las Vegas, NV, 89119, USA**
Email Address:	**legal@musictribe.com**

JN-80

This equipment has been tested and found to comply with the limits for a Class B digital device, pursuant to part 15 of the FCC Rules. These limits are designed to provide reasonable protection against harmful interference in a residential installation. This equipment generates, uses and can radiate radio frequency energy and, if not installed and used in accordance with the instructions, may cause harmful interference to radio communications. However, there is no guarantee that interference will not occur in a particular installation. If this equipment does cause harmful interference to radio or television reception, which can be determined by turning the equipment off and on, the user is encouraged to try to correct the interference by one or more of the following measures:

- Reorient or relocate the receiving antenna.
- Increase the separation between the equipment and receiver.
- Connect the equipment into an outlet on a circuit different from that to which the receiver is connected.
- Consult the dealer or an experienced radio/TV technician for help.

This equipment complies with Part 15 of the FCC rules. Operation is subject to the following two conditions:

(1) this device may not cause harmful interference, and
(2) this device must accept any interference received, including interference that may cause undesired operation.

Important information:

Changes or modifications to the equipment not expressly approved by Music Tribe can void the user's authority to use the equipment.

CE

Hereby, Music Tribe declares that this product is in compliance with Directive 2014/35/EU, Directive 2014/30/EU, Directive 2011/65/EU and Amendment 2015/863/EU, Directive 2012/19/EU, Regulation 519/2012 REACH SVHC and Directive 1907/2006/EC.

Full text of EU DoC is available at https://community.musictribe.com/

EU Representative: Empower Tribe Innovations DE GmbH
Address: Otto-Brenner-Strasse 4a, 47877 Willich, Germany

UK Representative: Empower Tribe Innovations UK Ltd.
Address: 5 Brindley Road Old Trafford, Manchester, United Kingdom, M16 9UN

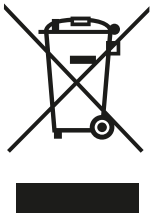

Correct disposal of this product: This symbol indicates that this product must not be disposed of with household waste, according to the WEEE Directive (2012/19/EU) and your national law. This product should be taken to a collection center licensed for the recycling of waste electrical and electronic equipment (EEE). The mishandling of this type of waste could have a possible negative impact on the environment and human health due to potentially hazardous substances that are generally associated with EEE. At the same time, your cooperation in the correct disposal of this product will contribute to the efficient use of natural resources. For more information about where you can take your waste equipment for recycling, please contact your local city office, or your household waste collection service.

We Hear You

behringer